

Blaulite ERV 25

Energy recovery ventilators for commercial applications

- Heat exchanger type: Counter flow
- Heat exchanger material: Enthalpy
- Supply filter: MERV 6 (MERV 8, MERV 13 optional)
- Extract filter: MERV 6 (MERV 8, MERV 13 optional)
- Casing material: Galvanized steel

	Unit of measurement	Blaulite ERV 25
Connected air duct size	in	8×30”
Phases	-	1
Minimum supply voltage	V	120
Maximum supply voltage	V	120
Power supply frequency	Hz	60
Rated power	W	2010
Maximum unit current	A	16.2
Maximum airflow	CFM	1785
Heat exchanger type	-	Counter flow
Heat exchanger material	-	Enthalpy
Weight	lb	276
Supply filter	-	MERV 6 (MERV 8, MERV 13 optional)
Extract filter	-	MERV 6 (MERV 8, MERV 13 optional)
Transported air temperature (min)	°F	9
Transported air temperature (max)	°F	90

Dimensions

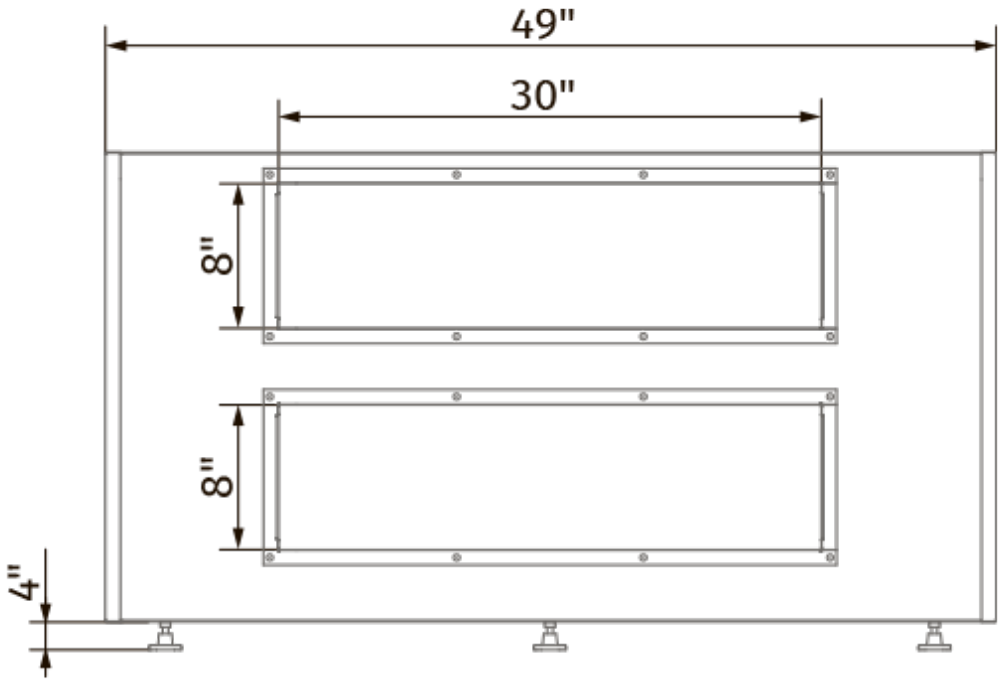
49"
30"
8"
8"
4"

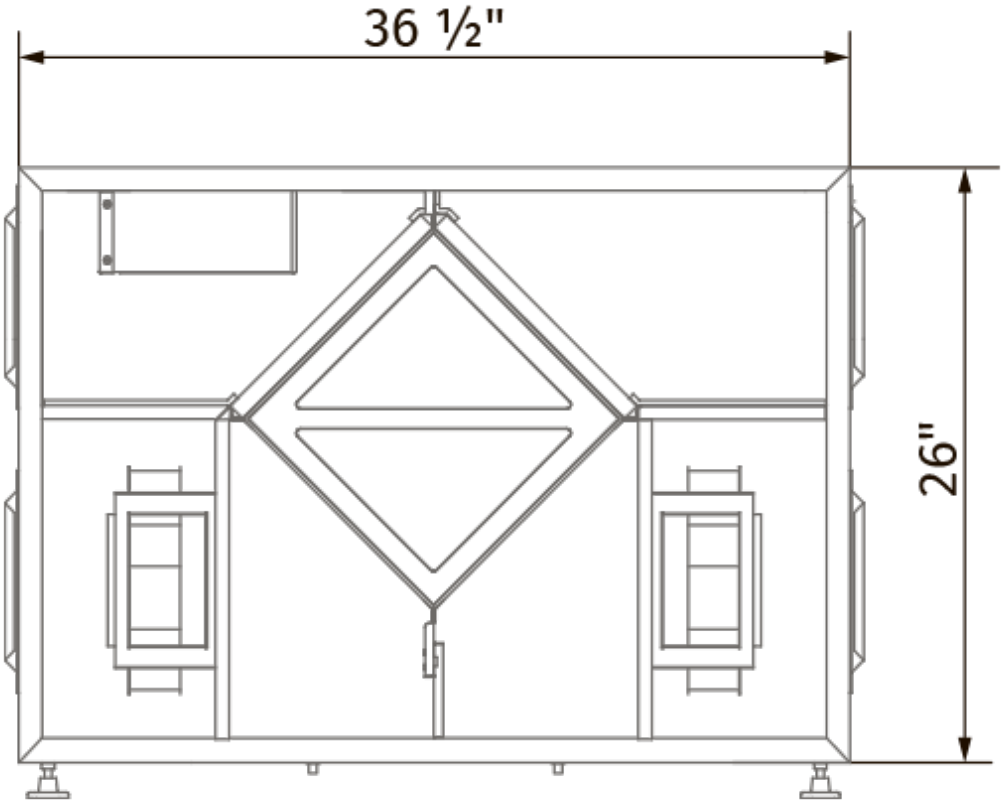
36 ½"
26"