

Blaulite HRV 13

Heat recovery ventilators for commercial applications

- Heat exchanger type: Counter flow
- Heat exchanger material: Aluminum
- Supply filter: MERV 6 (MERV 8, MERV 13 optional)
- Extract filter: MERV 6 (MERV 8, MERV 13 optional)
- Casing material: Galvanized steel

	Unit of measurement	Blaulite HRV 13
Connected air duct size	in	8×20”
Phases	-	1
Minimum supply voltage	V	120
Maximum supply voltage	V	120
Power supply frequency	Hz	60
Rated power	W	880
Maximum unit current	A	8.3
Maximum airflow	CFM	700
Heat exchanger type	-	Counter flow
Heat exchanger material	-	Aluminum
Weight	lb	179
Supply filter	-	MERV 6 (MERV 8, MERV 13 optional)
Extract filter	-	MERV 6 (MERV 8, MERV 13 optional)
Transported air temperature (min)	°F	5
Transported air temperature (max)	°F	90

Dimensions

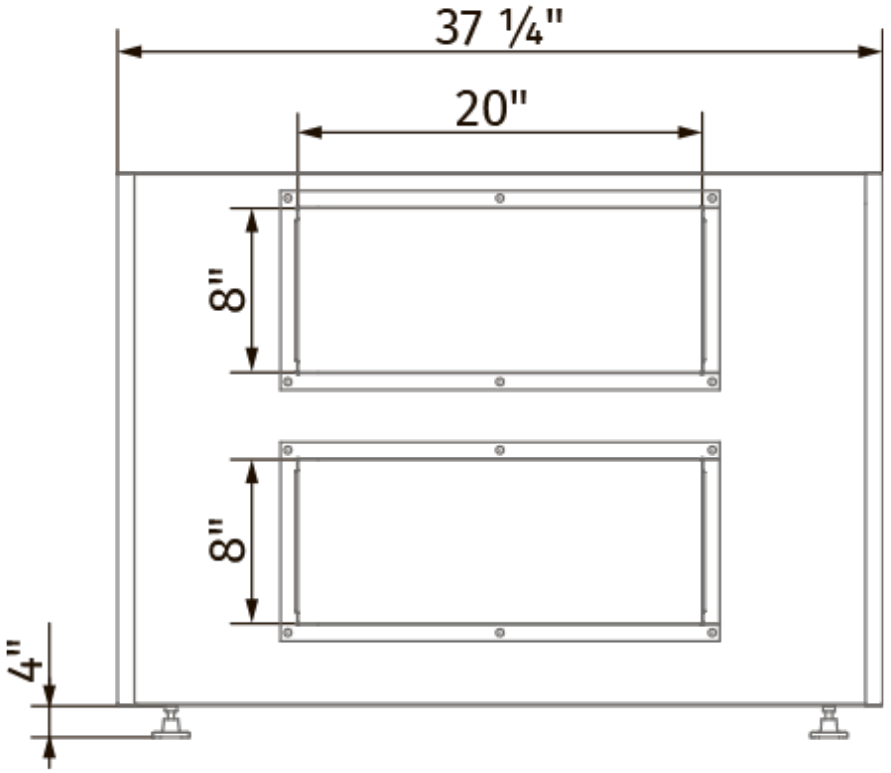
37 ¼"
20"
8"
8"
4"

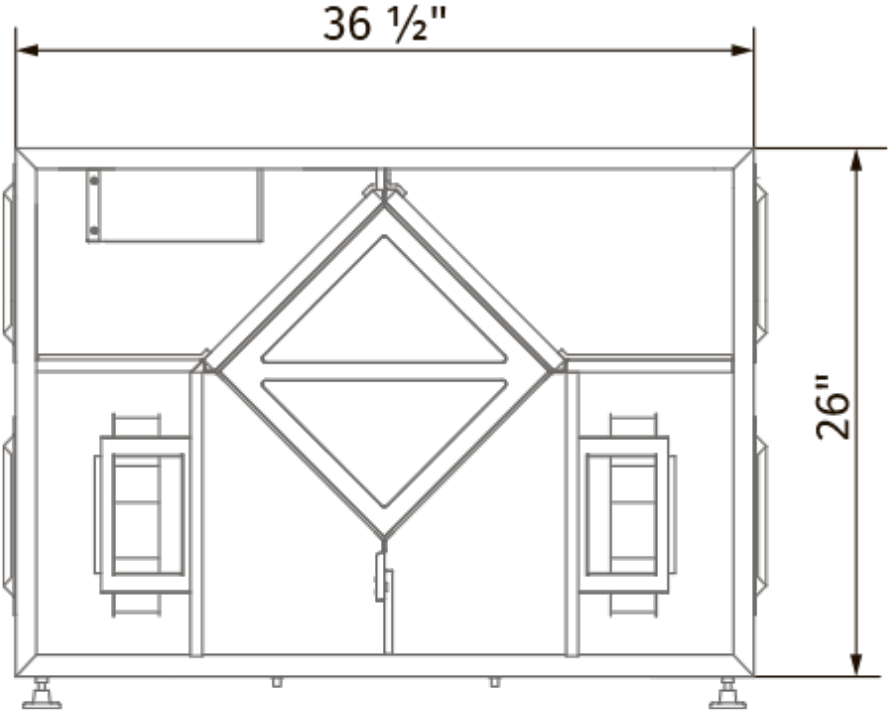
36 ½"
26"