

Centro 100

Inline centrifugal fans

• Impeller type: Centrifugal impeller with backward curved blades
• Casing material: Plastic

	Unit of measurement	Centro 100
Connected air duct size	in	4
Minimum supply voltage	V	120
Maximum supply voltage	V	120
Power supply frequency	Hz	60
Rated power	W	109
Maximum unit current	A	0.94
Max Rated Airflow: CFM @ 0.2 in. w.g.	CFM	170
Rotation speed at 60hz	-	2980
Sound level	Sones	2.3
Weight	lb	4.7

Dimensions

Ø D	Ø D1	B	L	L1	L2	L3
3 15/16”	9 13/16”	10 5/8”	9 1/16”	1 3/16”	1 1/16”	1 3/16”

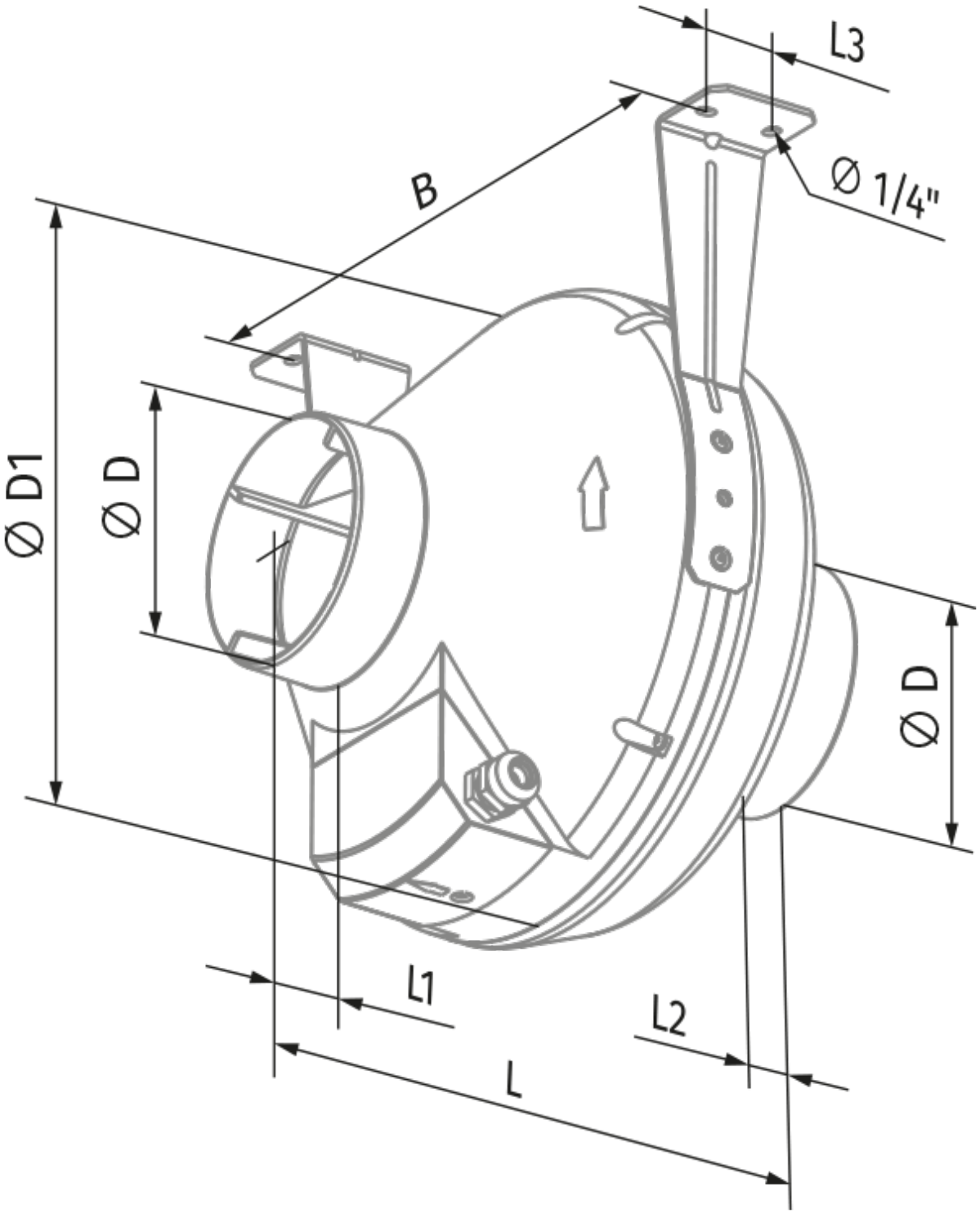
L3
B
Ø 1/4"
Ø D1
Ø D
Ø D
L1
L2
L