

Centro 125

Inline centrifugal fans

• Impeller type: Centrifugal impeller with backward curved blades
• Casing material: Plastic

	Unit of measurement	Centro 125
Connected air duct size	in	5
Minimum supply voltage	V	120
Maximum supply voltage	V	120
Power supply frequency	Hz	60
Rated power	W	114
Maximum unit current	A	0.95
Max Rated Airflow: CFM @ 0.2 in. w.g.	CFM	214
Rotation speed at 60hz	-	2960
Sound level	Sones	2.3
Weight	lb	4.9

Dimensions

Ø D	Ø D1	B	L	L1	L2	L3
4 15/16”	9 13/16”	10 5/8”	8 11/16”	1 3/16”	1 1/16”	1 3/16”

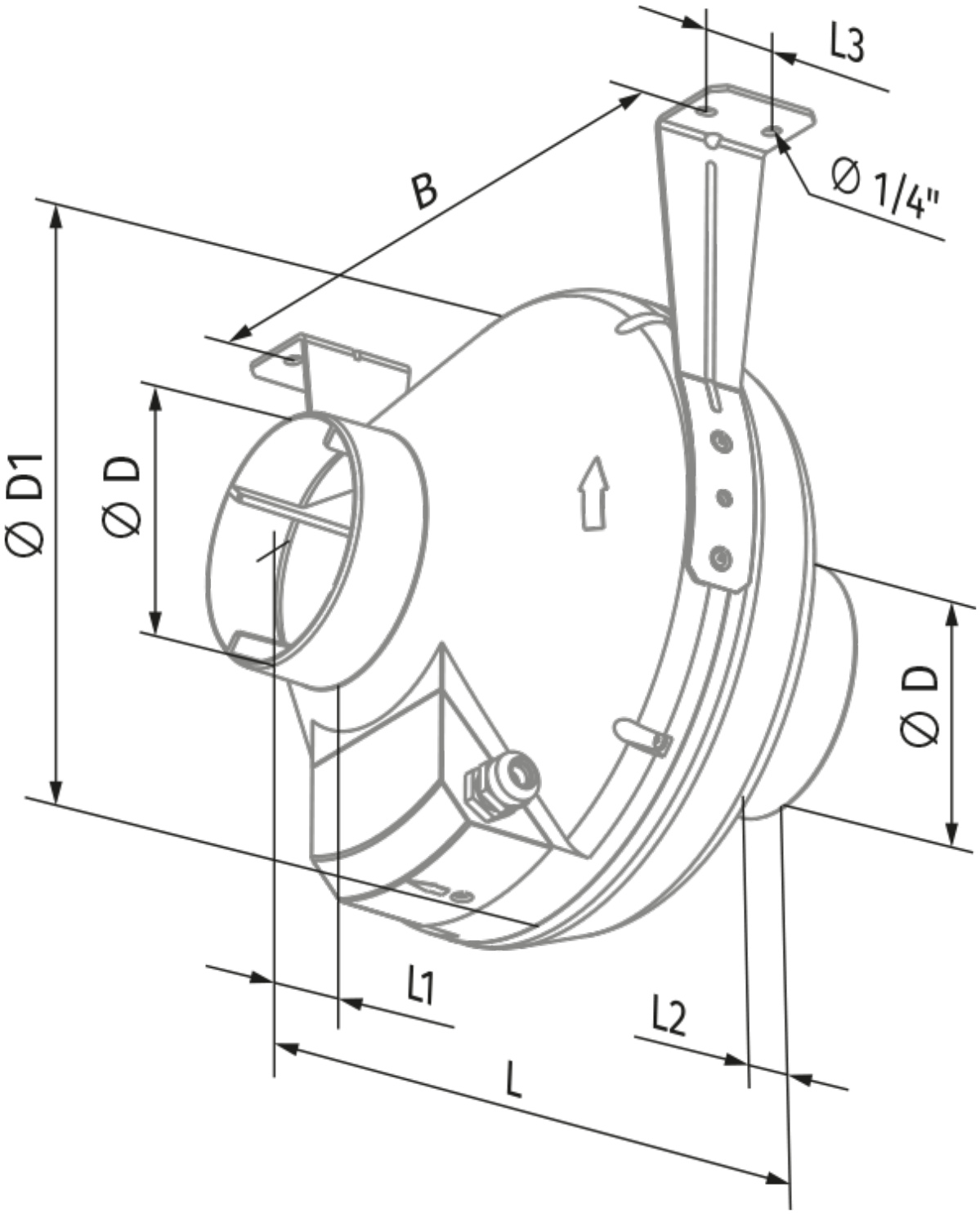
L3
B
Ø 1/4"
Ø D1
Ø D
Ø D
L1
L2
L