

Centro 150

Inline centrifugal fans

• Impeller type: Centrifugal impeller with backward curved blades
• Casing material: Plastic

	Unit of measurement	Centro 150
Connected air duct size	in	6
Minimum supply voltage	V	120
Maximum supply voltage	V	120
Power supply frequency	Hz	60
Rated power	W	93
Maximum unit current	A	0.77
Max Rated Airflow: CFM @ 0.2 in. w.g.	CFM	290
Rotation speed at 60hz	-	2785
Sound level	Sones	2.7
Weight	lb	5.7

Dimensions

Ø D	Ø D1	B	L	L1	L2	L3
5 7/8”	11 13/16”	12 3/16”	11 1/4”	1 3/16”	1 3/16”	1 3/16”

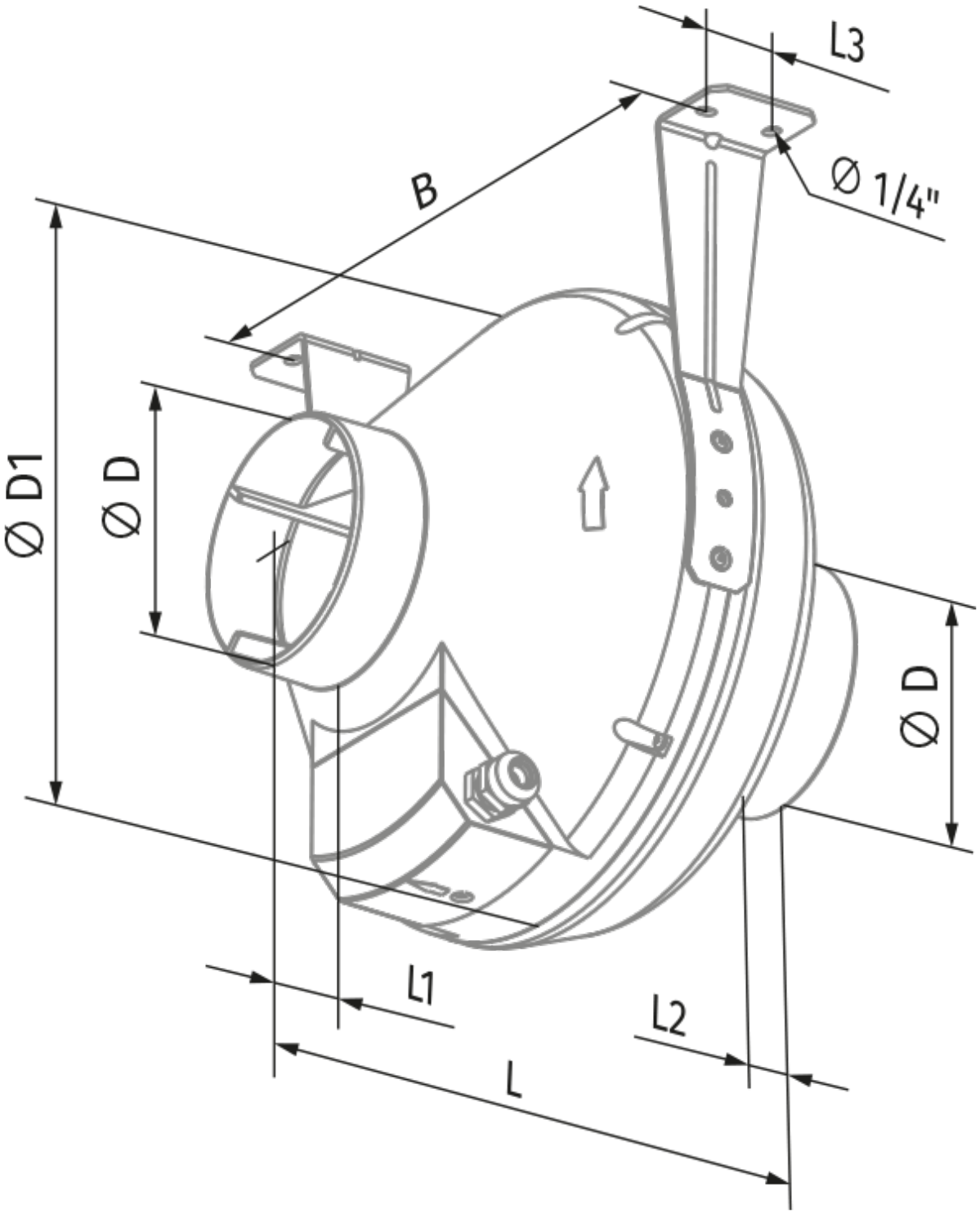
L3
B
Ø 1/4"
Ø D1
Ø D
Ø D
L1
L2
L