

Centro 250

Inline centrifugal fans

• Impeller type: Centrifugal impeller with backward curved blades
• Casing material: Plastic

	Unit of measurement	Centro 250
Connected air duct size	in	10
Minimum supply voltage	V	120
Maximum supply voltage	V	120
Power supply frequency	Hz	60
Rated power	W	266
Maximum unit current	A	2.25
Max Rated Airflow: CFM @ 0.2 in. w.g.	CFM	620
Rotation speed at 60hz	-	2523
Sound level	Sones	4.3
Weight	lb	9.9

Dimensions

Ø D	Ø D1	B	L	L1	L2	L3
9 13/16”	13 3/8”	13 15/16”	10 7/16”	1 3/16”	1 3/16”	1 9/16”

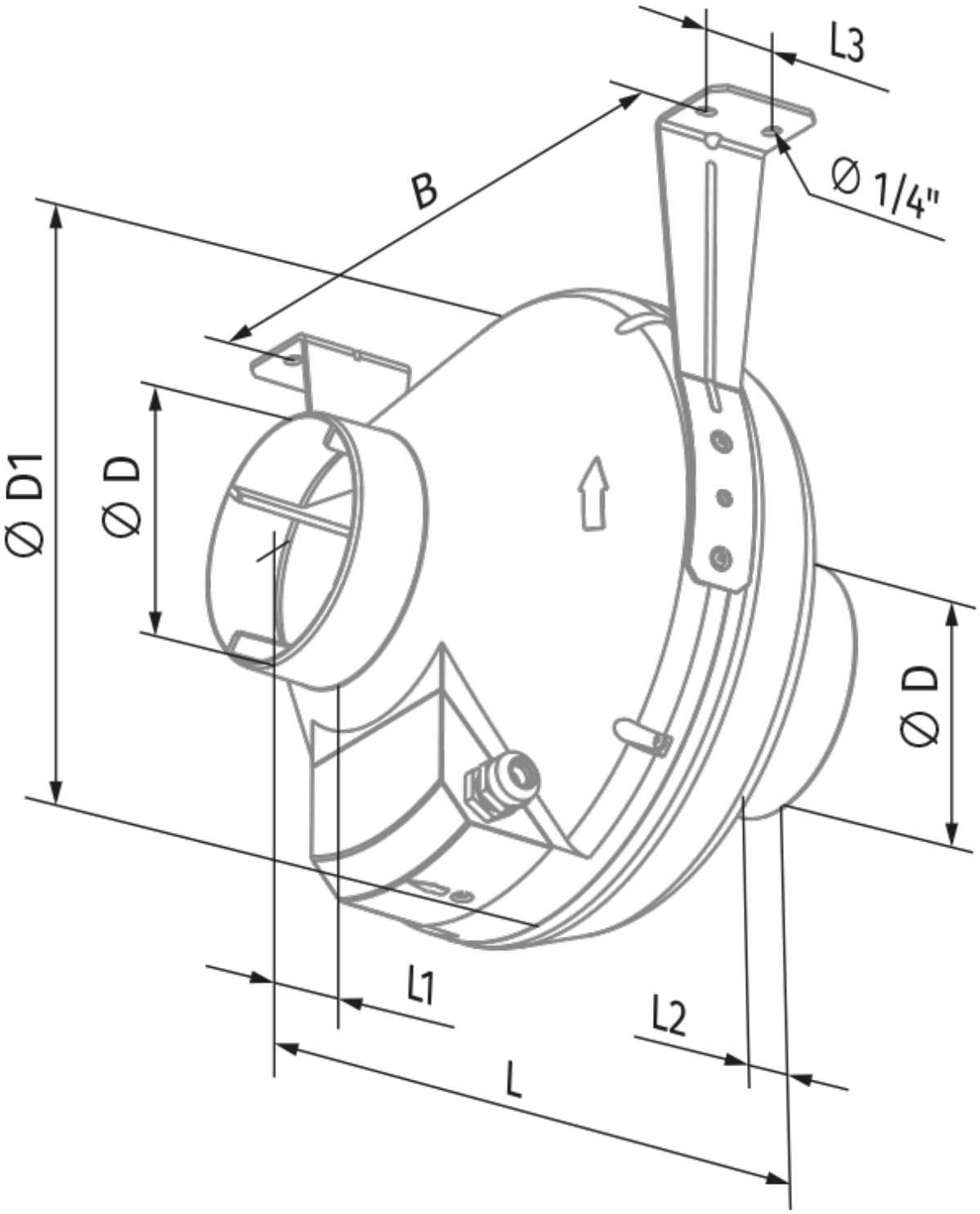
L3
B
Ø 1/4"
Ø D1
Ø D
Ø D
L1
L2
L