

Centro 315

Inline centrifugal fans

• Impeller type: Centrifugal impeller with backward curved blades
• Casing material: Plastic

	Unit of measurement	Centro 315
Connected air duct size	in	12
Minimum supply voltage	V	120
Maximum supply voltage	V	120
Power supply frequency	Hz	60
Rated power	W	269
Maximum unit current	A	2.25
Max Rated Airflow: CFM @ 0.2 in. w.g.	CFM	770
Rotation speed at 60hz	-	2641
Sound level	Sones	4.1
Weight	lb	11.2

Dimensions

Ø D	Ø D1	B	L	L1	L2	L3
12 3/8”	15 3/4”	16 5/16”	16 5/16”	1 9/16”	2 3/16”	1 9/16”

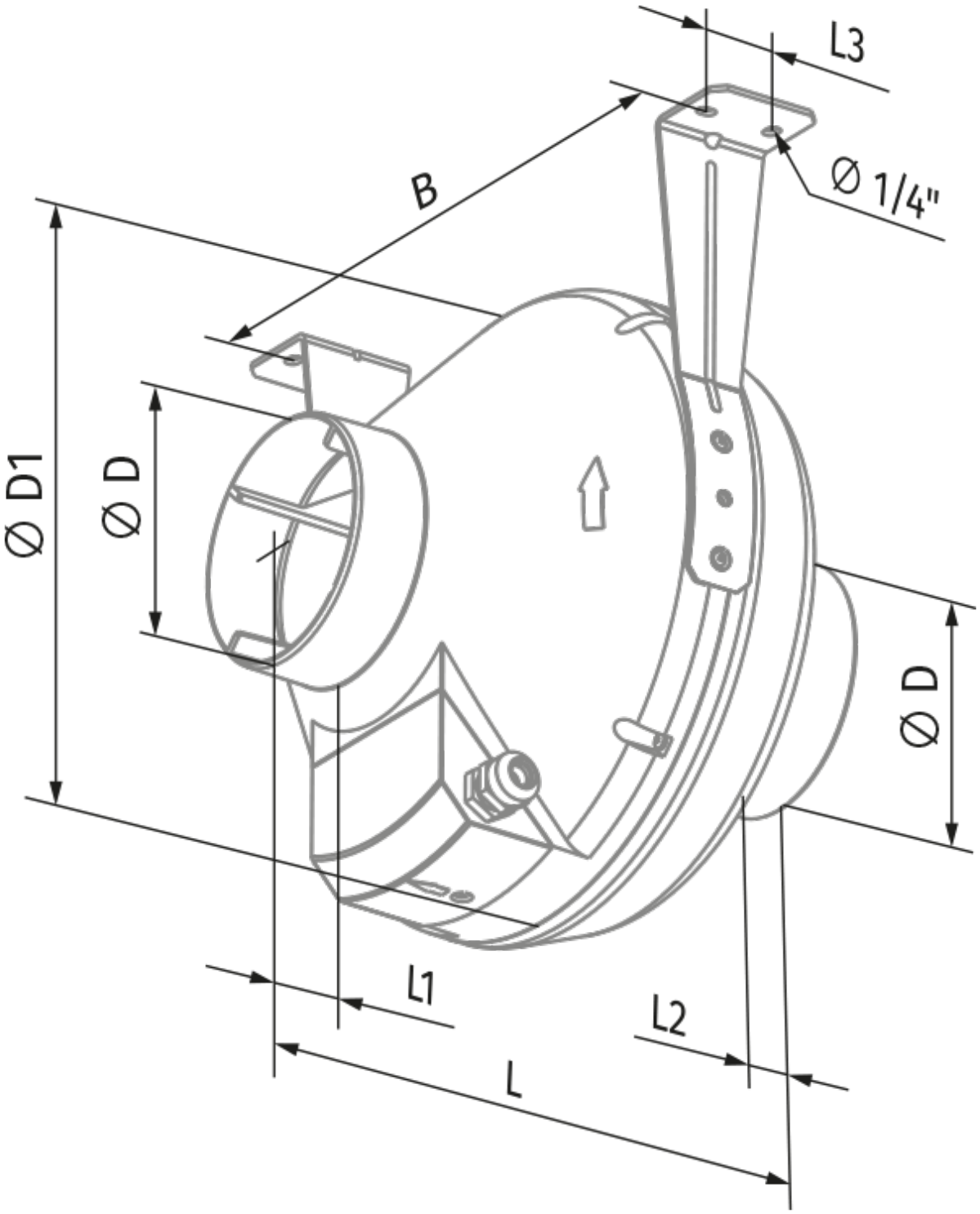
L3
B
Ø 1/4"
Ø D1
Ø D
Ø D
L1
L2
L