

Centro EC 100

Inline centrifugal fans

• Impeller type: Centrifugal impeller with backward curved blades
• Casing material: ABS Plastic

	Unit of measurement	Centro EC 100
Connected air duct size	in	4
Minimum supply voltage	V	120
Maximum supply voltage	V	120
Power supply frequency	Hz	60
Rated power	W	29.5
Maximum unit current	A	0.53
Max Rated Airflow: CFM @ 0.2 in. w.g.	CFM	115
Rotation speed at 60hz	-	2436
Sound level	Sones	3
Weight	lb	4.7
Ingress protection rating	-	IPX4
Ingress protection rating of the drive	-	IP55

Dimensions

Ø D	Ø D1	B	L	L1	L2	L3
3 15/16”	9 13/16”	10 5/8”	9 1/16”	1 3/16”	1 1/16”	1 3/16”

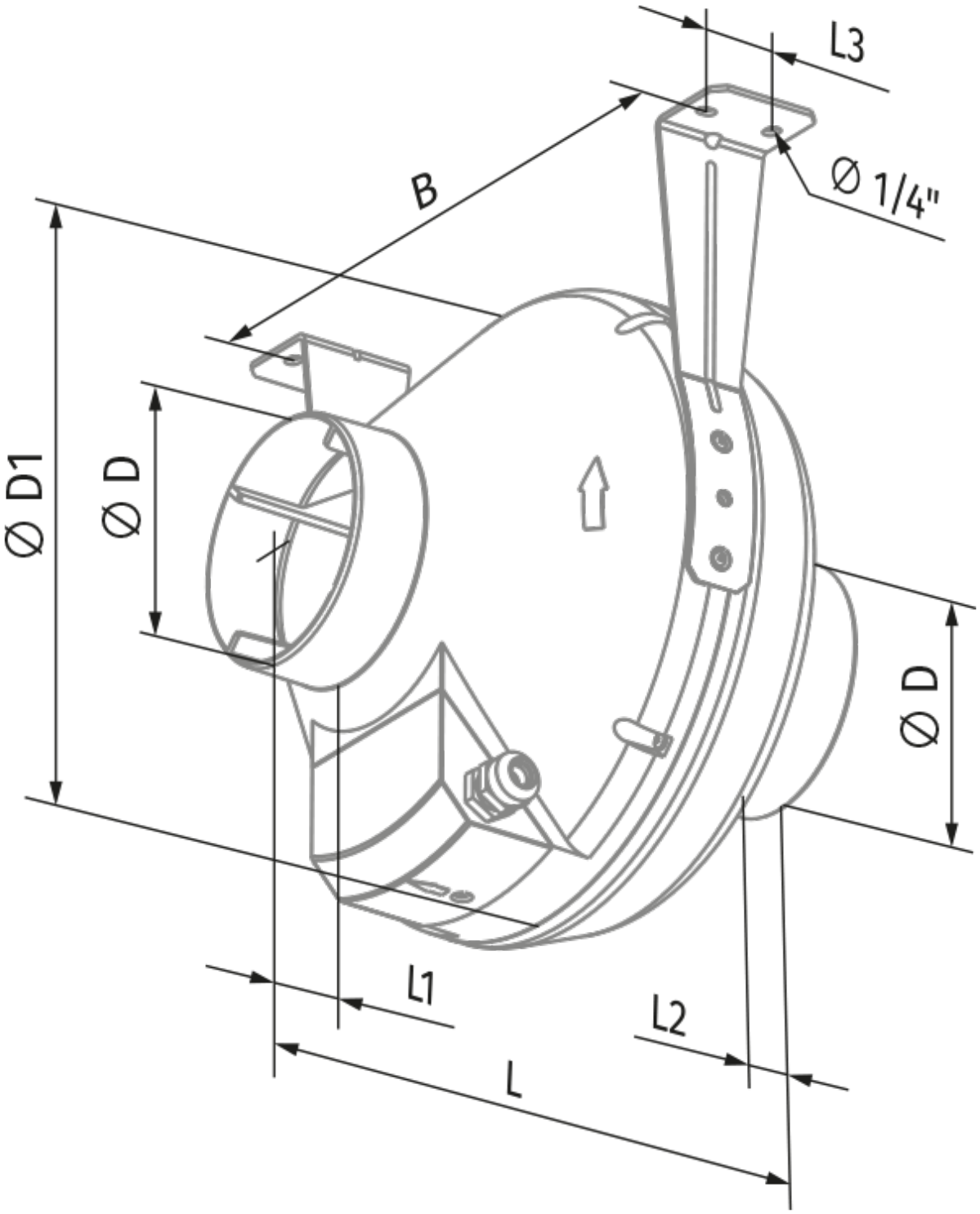
L3
B
Ø 1/4"
Ø D1
Ø D
Ø D
L1
L2
L