

Centro EC 150

Inline centrifugal fans

• Impeller type: Centrifugal impeller with backward curved blades
• Casing material: ABS Plastic

	Unit of measurement	Centro EC 150
Connected air duct size	in	6
Minimum supply voltage	V	120
Maximum supply voltage	V	120
Power supply frequency	Hz	60
Rated power	W	76
Maximum unit current	A	1.08
Max Rated Airflow: CFM @ 0.2 in. w.g.	CFM	305
Rotation speed at 60hz	-	3252
Sound level	Sones	3.8
Weight	lb	5.7
Ingress protection rating	-	IPX4
Ingress protection rating of the drive	-	IP55

Dimensions

Ø D	Ø D1	B	L	L1	L2	L3
5 7/8”	11 13/16”	12 3/16”	11 1/4”	1 3/16”	1 3/16”	1 3/16”

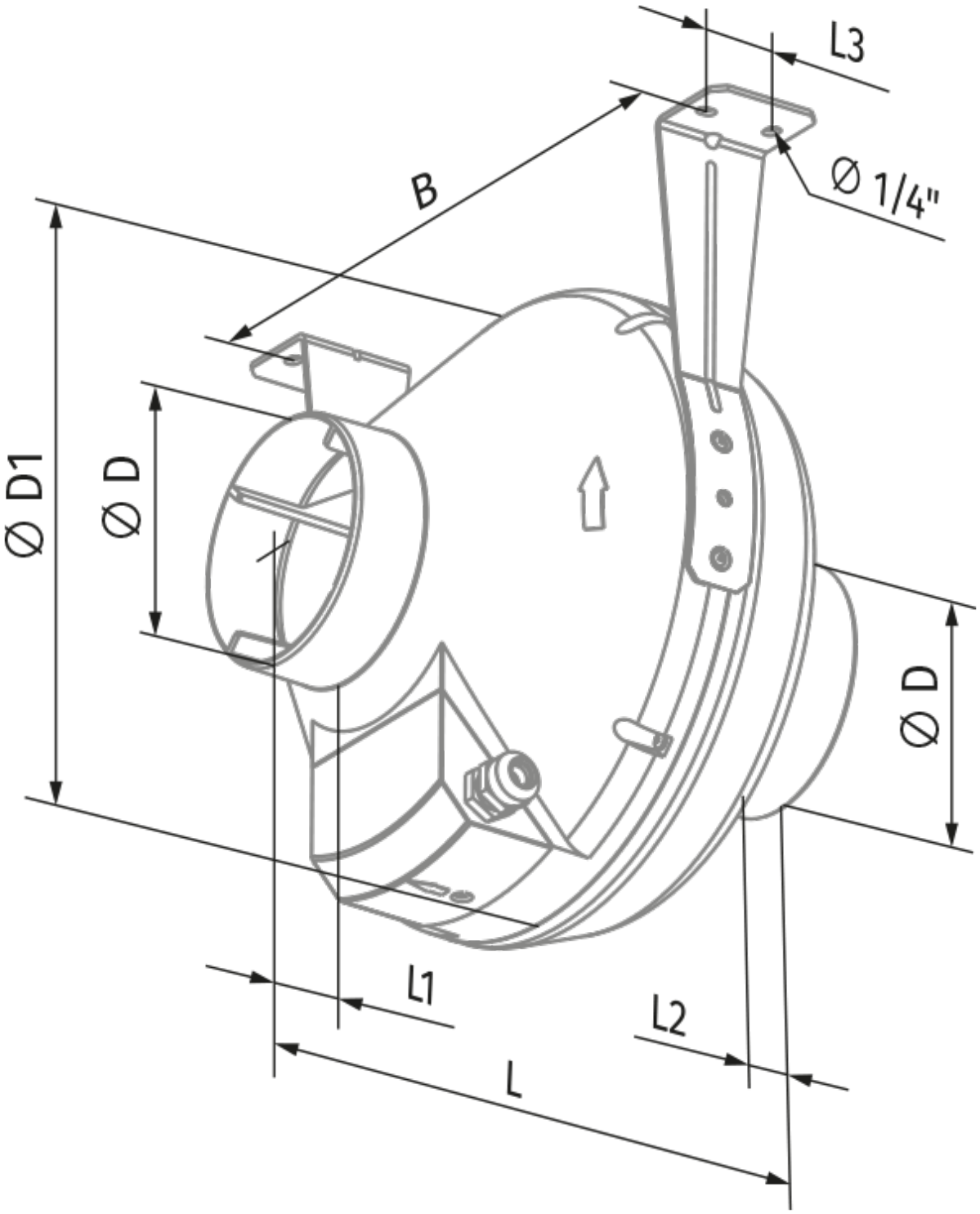
L3
B
Ø 1/4"
Ø D1
Ø D
Ø D
L1
L2
L