

Centro EC 200

Inline centrifugal fans

• Impeller type: Centrifugal impeller with backward curved blades
• Casing material: ABS Plastic

	Unit of measurement	Centro EC 200
Connected air duct size	in	8
Minimum supply voltage	V	120
Maximum supply voltage	V	120
Power supply frequency	Hz	60
Rated power	W	99
Maximum unit current	A	1.45
Max Rated Airflow: CFM @ 0.2 in. w.g.	CFM	423
Rotation speed at 60hz	-	3000
Sound level	Sones	3.9
Weight	lb	8.8
Ingress protection rating	-	IPX4
Ingress protection rating of the drive	-	IP55

Dimensions

Ø D	Ø D1	B	L	L1	L2	L3
7 7/8”	13 3/8”	13 15/16”	10 7/8”	1 3/16”	1 3/16”	1 9/16”

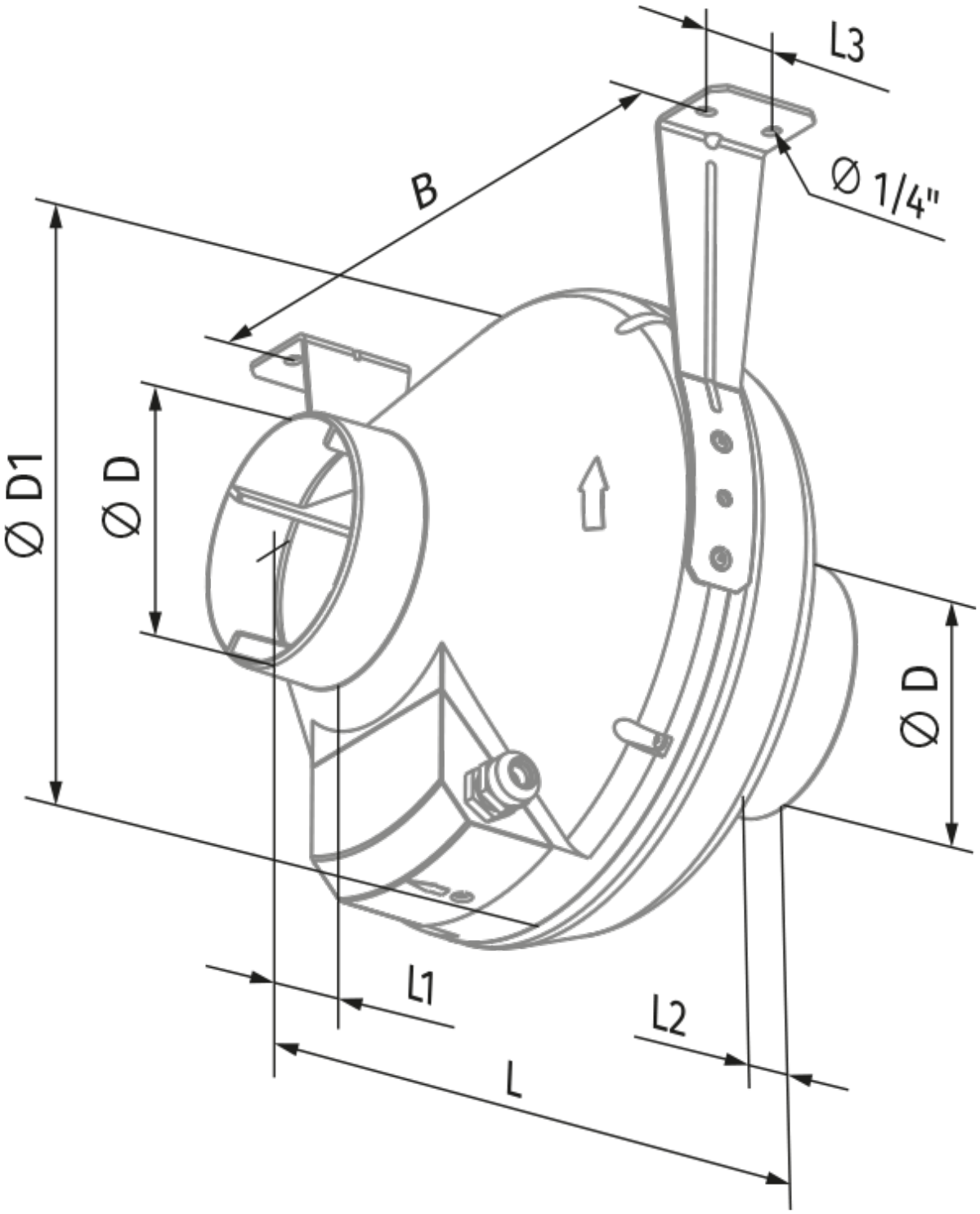
L3
B
Ø 1/4"
Ø D1
Ø D
Ø D
L1
L2
L