

Centro-Jet-22N-EC-E-230V

Induction centrifugal fans Centro-Jet are designed for general purpose ventilation of underground and semi-opened parkings. The fans generate a high-speed and high-pressure directed air jet.

• Casing material: Coated steel

	Unit of measurement	Centro-Jet-22N-EC-E-230V
Phases	-	1
Minimum supply voltage	V	208
Maximum supply voltage	V	230
Voltage	V	230 (208)
Power supply frequency	Hz	50/60
Rated power	W	460
Maximum airflow	CFM	1325
Rotation speed at 60hz	-	2100
Thrust	N	22
Weight	lb	52.91
Ingress protection rating of the drive	-	IP55

Dimensions

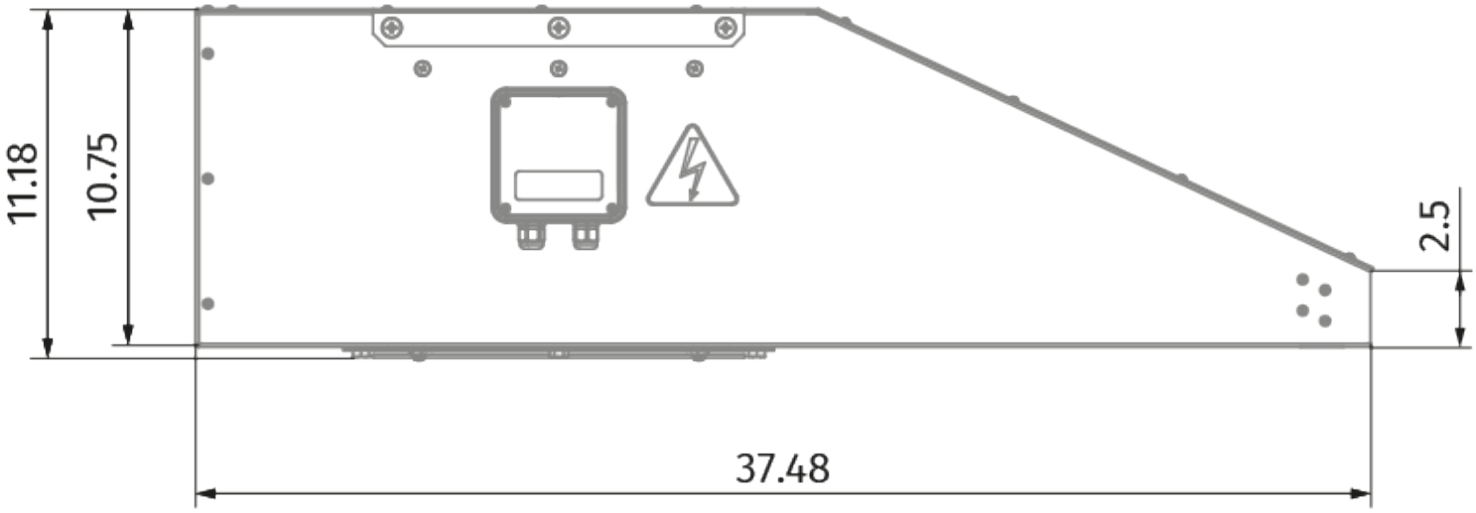
11.18
10.75
2.5
37.48

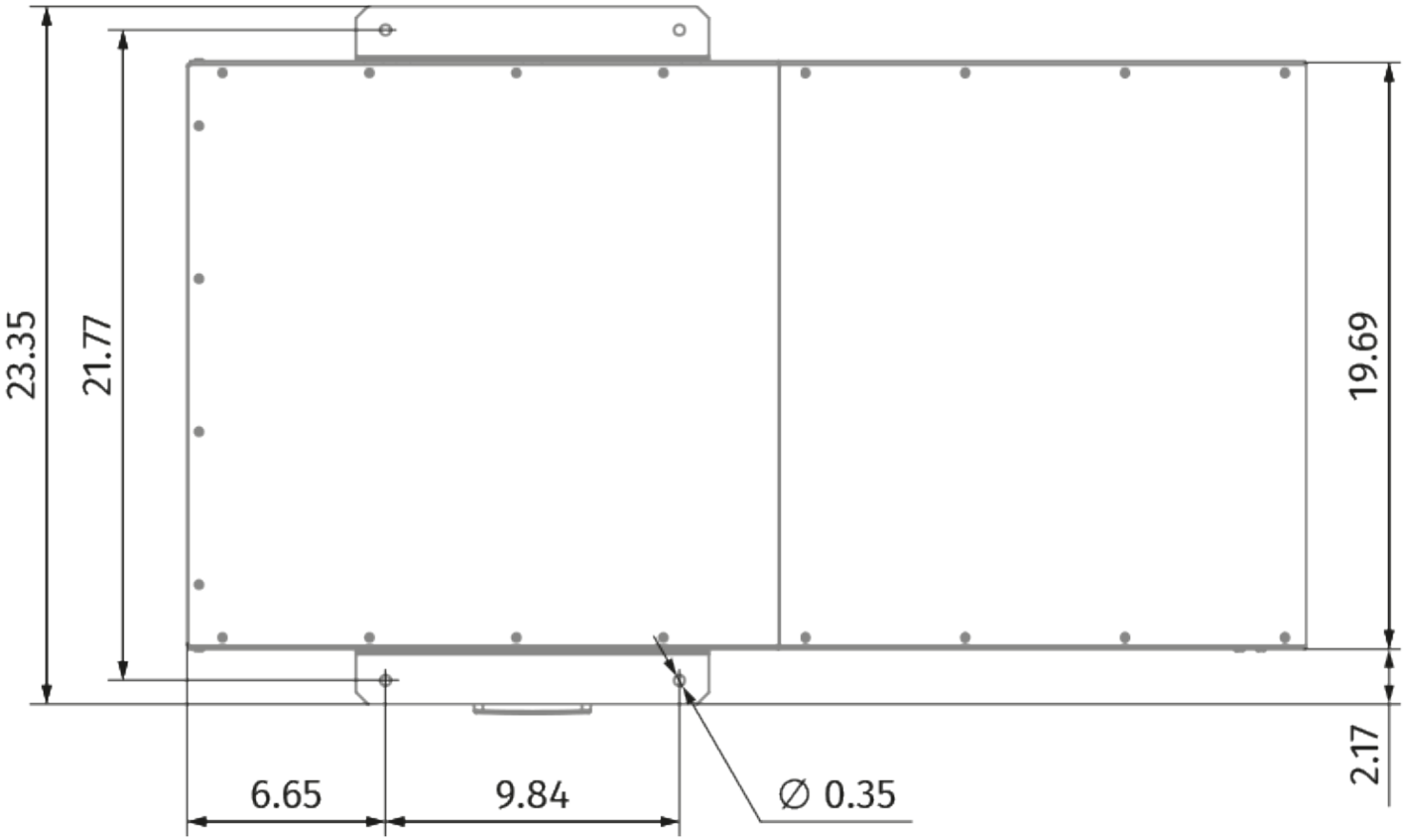
23.35
21.77
19.69
2.17
6.65
9.84
∅ 0.35