

Centro-Jet-50N-4/6-60Hz

Induction centrifugal fans Centro-Jet are designed for operation in general ventilation and smoke extraction systems of underground and semi-open parking facilities. The fans are rated for fire resistance classes F300 (572 °F/120 min) or F400 (752 °F/120 min).

- Sound pressure level LpA at 3 m: 72/59
- Casing material: Coated steel

	Unit of measurement	Centro-Jet-50N-4/6-60Hz	
Speed	-	1	2
Phases	-	3	
Minimum supply voltage	V	400	
Maximum supply voltage	V	400	
Voltage	V	380	
Power supply frequency	Hz	60	
Rated power	W	1500/370	
Maximum airflow	CFM	3767/2502	
Rotation speed at 60hz	-	1800/1200	
Thrust	N	30	
Sound pressure level LpA at 3 m	dB(A)	72/59	
Weight	lb	211.64	
Transported air temperature (max)	°F	131	
Transported air temperature (min)	°F	-13	
Ingress protection rating of the drive	-	IP55	

Dimensions

A	B	C	H	K
11.42''	53.35''	36.81''	3.54''	13.78''

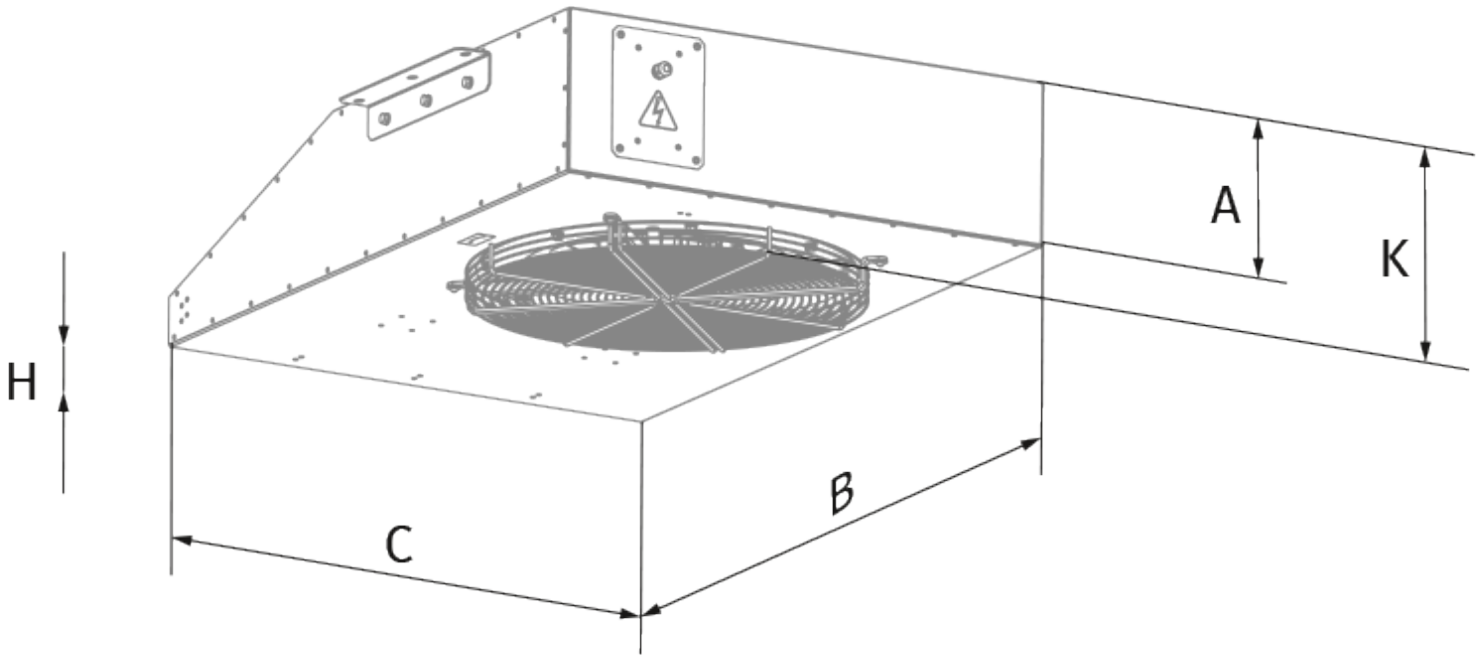
H
A
K
C
B