Centro-Jet-50N-EC-230V

Induction centrifugal fans Centro-Jet are designed for general purpose ventilation of underground and semi-opened parkings. The fans generate a high-speed and high-pressure directed air jet.

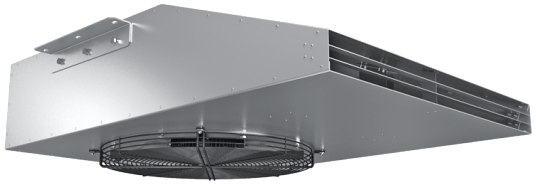

• Casing material: Coated steel

	Unit of measurement	Centro-Jet-50N-EC-230V
Phases	-	3
Minimum supply voltage	V	208
Maximum supply voltage	V	230
Voltage	V	230 (208)
Power supply frequency	Hz	50/60
Rated power	W	1500
Maximum airflow	CFM	3650
Rotation speed at 60hz	-	1500
Thrust	N	50
Weight	lb	202.82
Transported air temperature (max)	°C	55
Ingress protection rating of the drive	-	IP55

Dimensions

A	B	C	H	K
10.43”	53.34”	36.81”	3.54”	12.8”

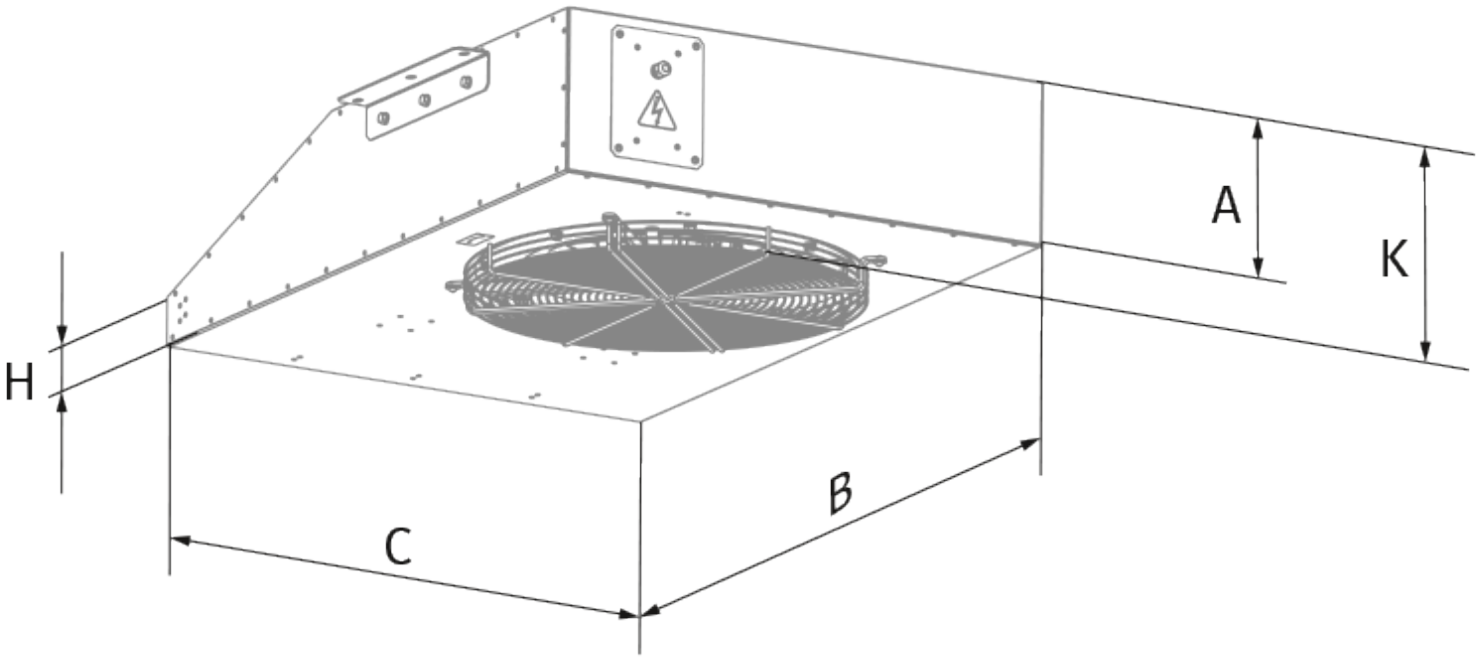
H
A
K
C
B