

Centro-Jet Dual 12N EC

The Centro-Jet Dual is a new, ergonomic, efficient version of centrifugal fans for use in confined spaces with low ceiling heights. Suitable for mining pollutants and CO in car parks, access tunnels, exits routes and shopping malls.

	Unit of measurement	Centro-Jet Dual 12N EC
Phases	-	1
Voltage	V	230 (208)
Power supply frequency	Hz	50/60
Rated power	W	320
Maximum airflow	CFM	1500
Rotation speed at 60hz	-	2800
Thrust	N	12
Weight	lb	39.68
Transported air temperature (max)	°F	140
Transported air temperature (min)	°F	-4
Ingress protection rating of the drive	-	IP55

Dimensions

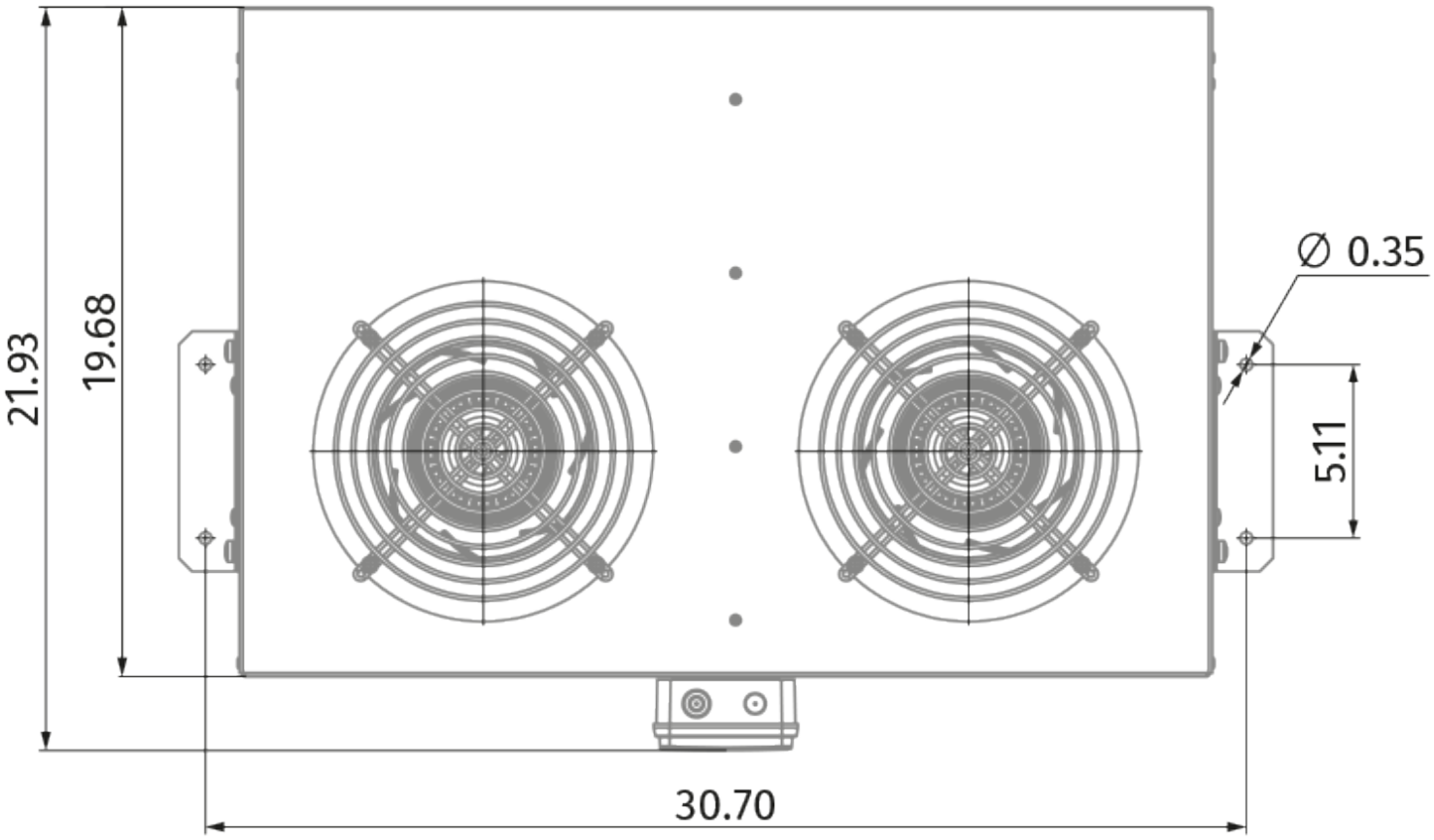
21.93
19.68
∅ 0.35
5.11
30.70

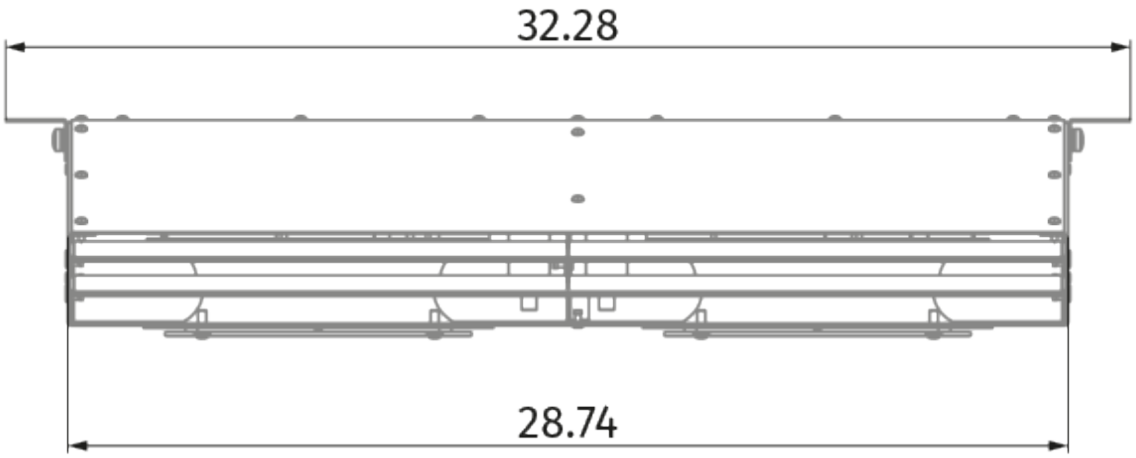
32.28
28.74

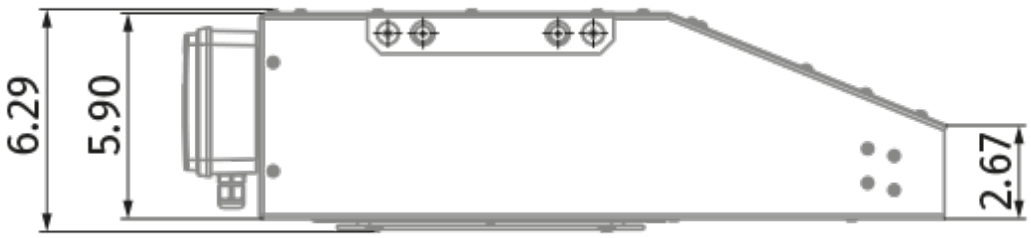
6.29
5.90
2.67