

Centro-M 125

Inline centrifugal fans

• Impeller type: Centrifugal impeller with backward curved blades
• Casing material: Coated steel

	Unit of measurement	Centro-M 125
Connected air duct size	in	5
Minimum supply voltage	V	120
Maximum supply voltage	V	120
Power supply frequency	Hz	60
Rated power	W	73
Maximum unit current	A	0.62
Max Rated Airflow: CFM @ 0.2 in. w.g.	CFM	200
Rotation speed at 60hz	-	2663
Sound level	Sones	3.3
Ingress protection rating	-	IPX4
Ingress protection rating of the drive	-	IP44

Dimensions

Ø D	Ø D1	B	B1	L	L1	L2	L3
4 15/16”	10”	11 3/4”	10 3/16”	8 1/16”	0 13/16”	1”	1 3/16”

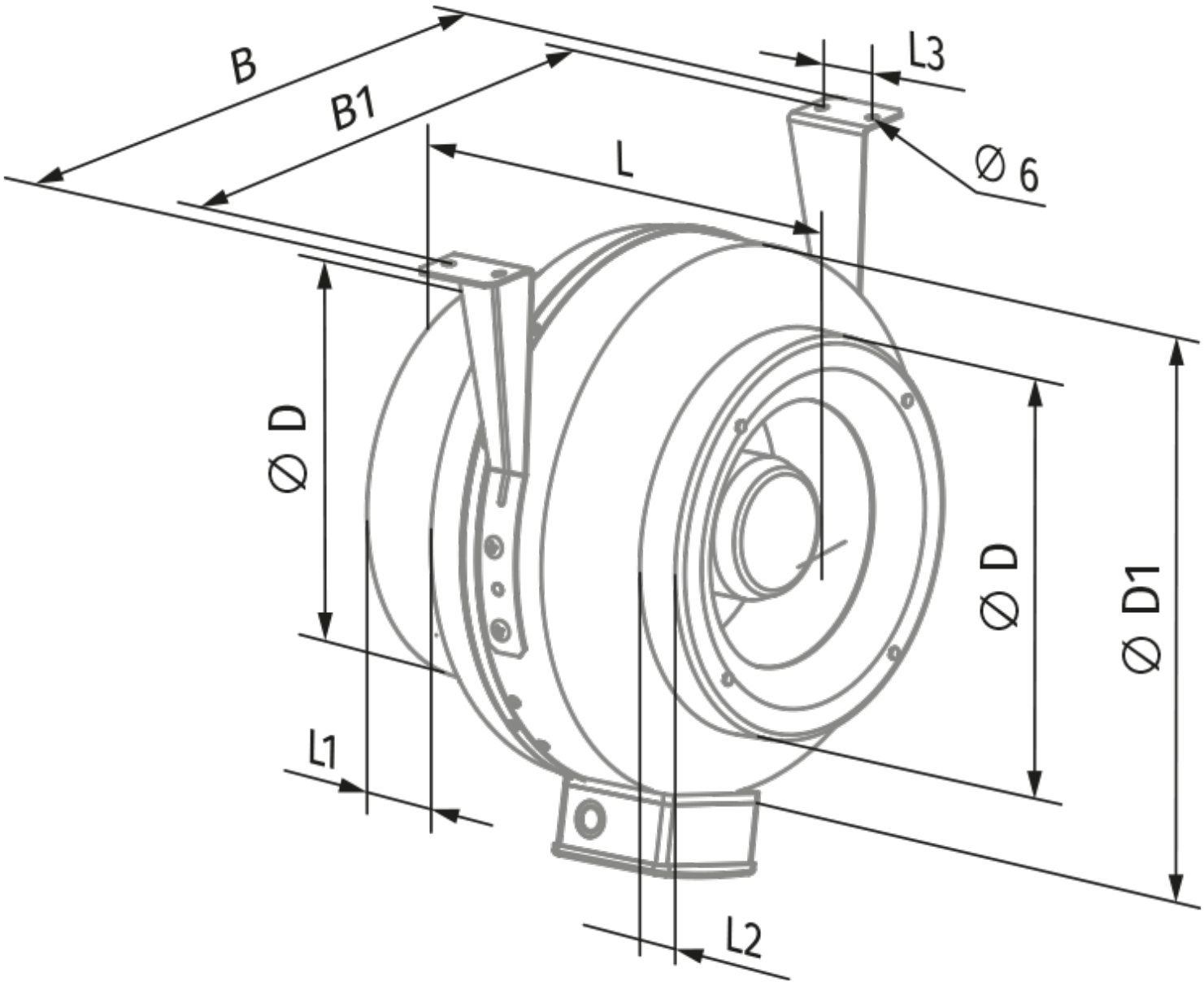
B
B1
L
L3
Ø 6
Ø D
Ø D
Ø D1
L1
L2