

# Centro-M 200 max

Inline centrifugal fans

• Impeller type: Centrifugal impeller with backward curved blades
• Casing material: Coated steel

| | Unit of measurement | Centro-M 200 max |
|---|---|---|
| Connected air duct size | in | 8 |
| Minimum supply voltage | V | 120 |
| Maximum supply voltage | V | 120 |
| Power supply frequency | Hz | 60 |
| Rated power | W | 240 |
| Maximum unit current | A | 2.14 |
| Max Rated Airflow: CFM @ 0.2 in. w.g. | CFM | 632 |
| Rotation speed at 60hz | - | 2745 |
| Sound level | Sones | 4.7 |
| Ingress protection rating | - | IPX4 |
| Ingress protection rating of the drive | - | IP44 |

## Dimensions

| Ø D | Ø D1 | B | B1 | L | L1 | L2 | L3 |
|---|---|---|---|---|---|---|---|
| 7 7/8” | 13 9/16” | 15 3/8” | 13 3/4” | 9 7/8” | 1” | 1 1/8” | 1 9/16” |

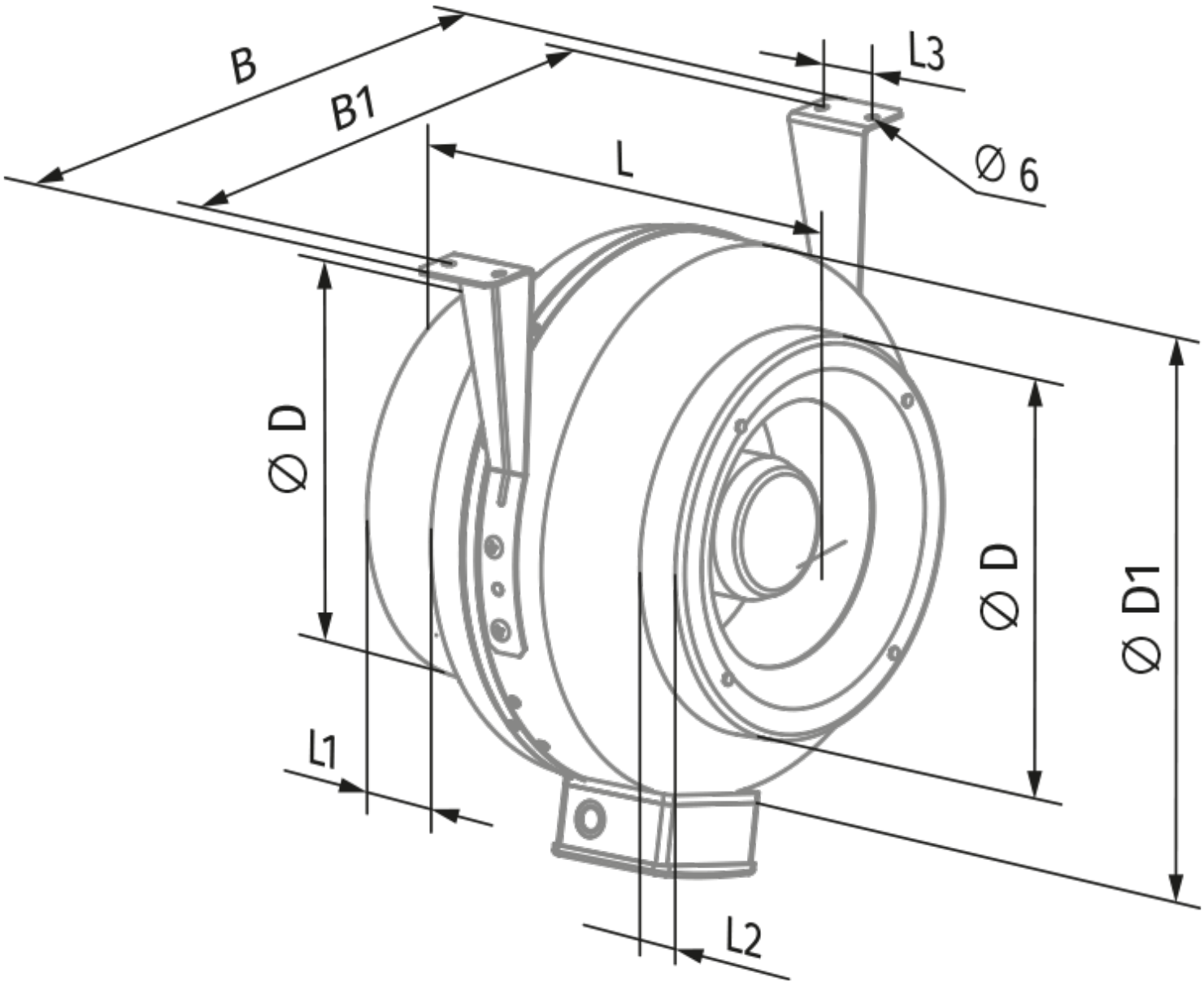
B
B1
L
L3
Ø 6
Ø D
Ø D
Ø D1
L1
L2