

Centro-M 305

Inline centrifugal fans

• Impeller type: Centrifugal impeller with backward curved blades
• Casing material: Coated steel

	Unit of measurement	Centro-M 305
Connected air duct size	in	12
Minimum supply voltage	V	120
Maximum supply voltage	V	120
Power supply frequency	Hz	60
Rated power	W	219
Maximum unit current	A	1.91
Max Rated Airflow: CFM @ 0.2 in. w.g.	CFM	680
Rotation speed at 60hz	-	2647
Sound level	Sones	5.7
Ingress protection rating	-	IPX4
Ingress protection rating of the drive	-	IP44

Dimensions

Ø D	Ø D1	B	B1	L	L1	L2	L3
12”	15 7/8”	17 3/4”	16 5/16”	10 1/4”	0 15/16”	1 3/16”	1 9/16”

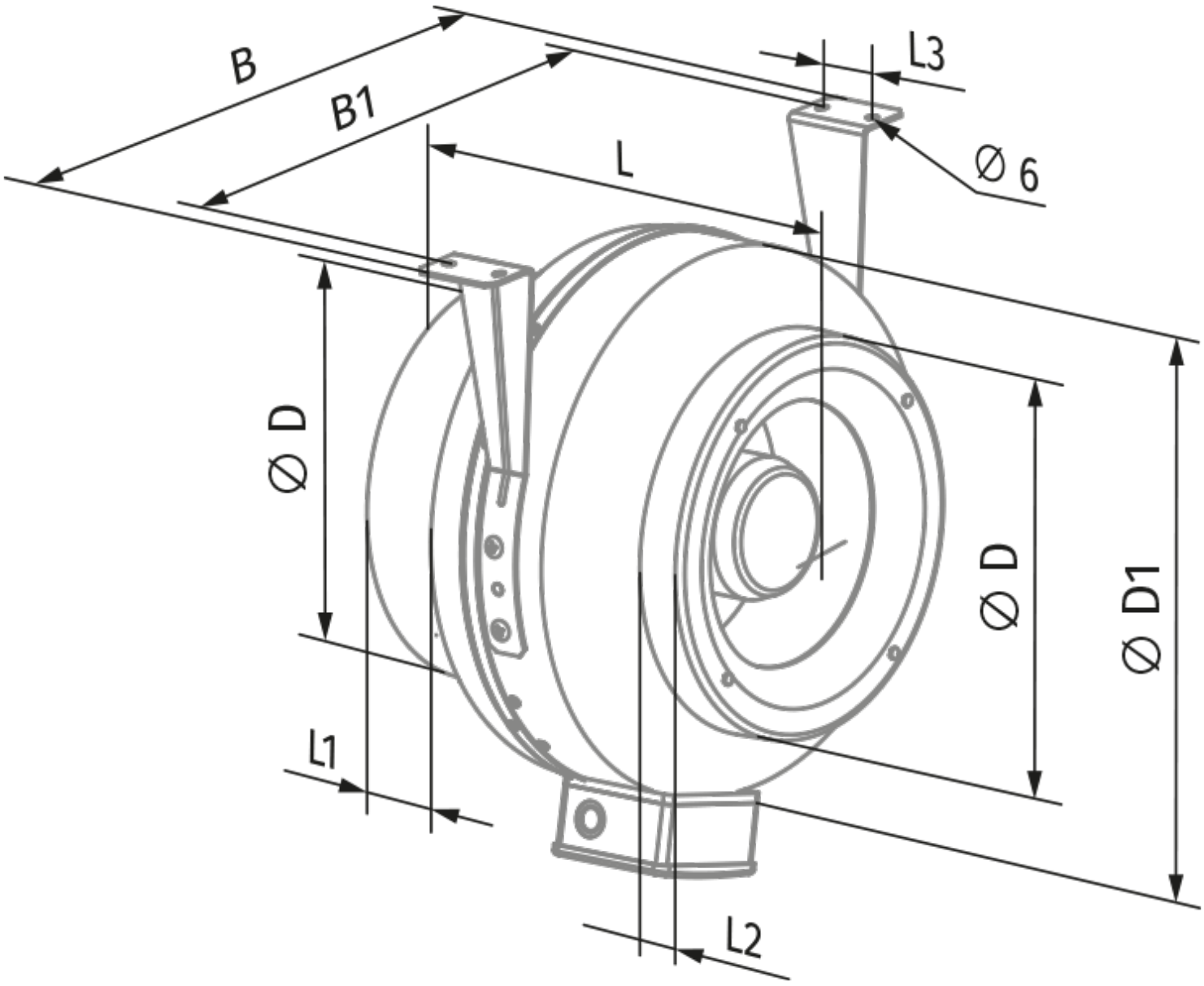
B
B1
L
L3
Ø 6
Ø D
Ø D
Ø D1
L1
L2