

Centro-M 355 L

Inline centrifugal fans

• Impeller type: Centrifugal impeller with backward curved blades
• Casing material: Coated steel

	Unit of measurement	Centro-M 355 L
Connected air duct size	in	14
Minimum supply voltage	V	220
Maximum supply voltage	V	220
Power supply frequency	Hz	60
Rated power	W	297
Maximum unit current	A	1.3
Max Rated Airflow: CFM @ 0.2 in. w.g.	CFM	1248
Rotation speed at 60hz	-	1620
Sound level	Sones	8
Ingress protection rating	-	IPX4
Ingress protection rating of the drive	-	IP54

Dimensions

Ø D	Ø D1	B	B1	L	L1	L2	L3
13 7/8”	18 1/8”	20 9/16”	20 9/16”	19 15/16”	2 3/8”	2 3/8”	2 3/4”

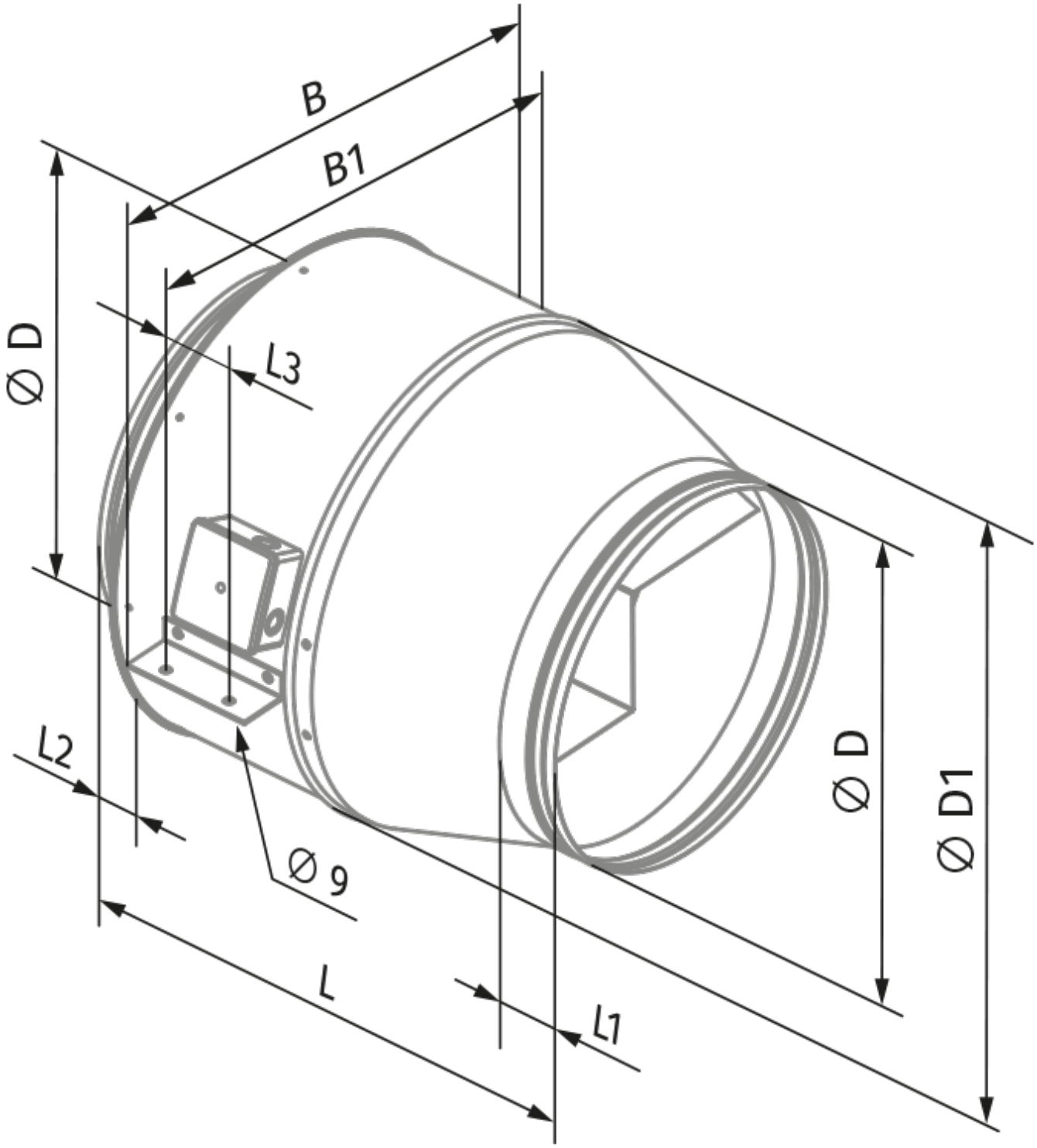
B
B1
Ø D
L3
L2
Ø 9
L
L1
Ø D
Ø D1