

Centro-M 400

Inline centrifugal fans

• Impeller type: Centrifugal impeller with backward curved blades
• Casing material: Coated steel

	Unit of measurement	Centro-M 400
Connected air duct size	in	16
Minimum supply voltage	V	220
Maximum supply voltage	V	220
Power supply frequency	Hz	60
Rated power	W	673
Maximum unit current	A	3.05
Max Rated Airflow: CFM @ 0.2 in. w.g.	CFM	1989
Rotation speed at 60hz	-	1585
Sound level	Sones	9.8
Ingress protection rating	-	IPX4
Ingress protection rating of the drive	-	IP54

Dimensions

Ø D	Ø D1	B	B1	L	L1	L2	L3
15 11/16”	22 7/16”	26 1/8”	24 15/16”	22 7/16”	2 3/8”	2 3/8”	2 3/4”

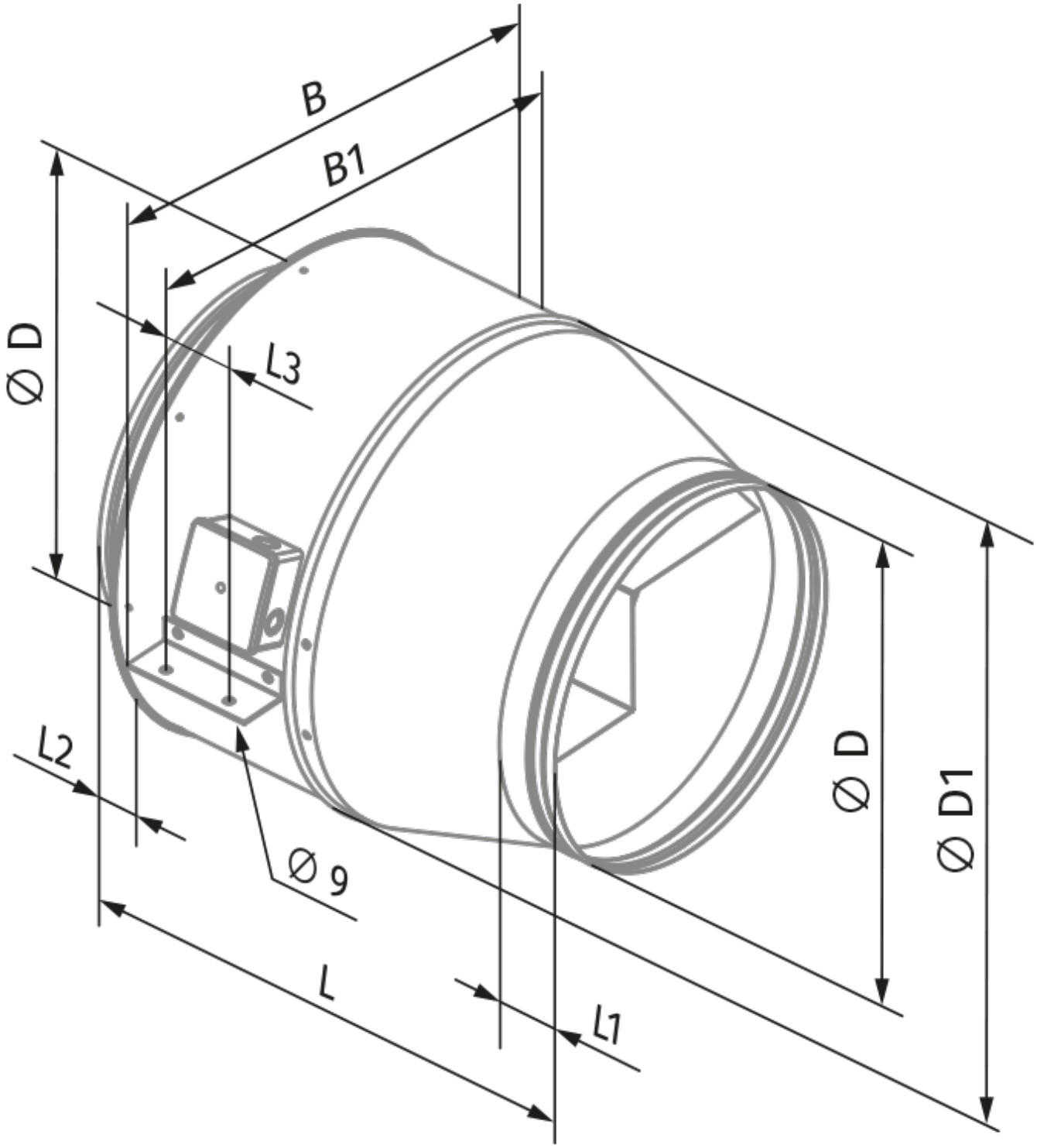
B
B1
Ø D
L3
L2
Ø 9
L
L1
Ø D
Ø D1