

Centro-M EC 125

Inline centrifugal fans with EC motor

• Impeller type: Centrifugal impeller with backward curved blades
• Casing material: Coated steel

	Unit of measurement	Centro-M EC 125
Connected air duct size	in	5
Minimum supply voltage	V	120
Maximum supply voltage	V	120
Power supply frequency	Hz	60
Rated power	W	57.1
Maximum unit current	A	0.84
Max Rated Airflow: CFM @ 0.2 in. w.g.	CFM	231
Rotation speed at 60hz	-	3396
Sound level	Sones	6.8
Weight	lb	6.8
Transported air temperature (max)	°C	60
Transported air temperature (min)	°C	-25
Ingress protection rating	-	IPX4
Ingress protection rating of the drive	-	IP44

Dimensions

Ø D	Ø D1	H	B	B1	L	L1	L2	L3
4 27/32”	10 3/64”	13 25/64”	12 13/64”	10 5/8”	7 63/64”	25/32”	63/64”	1 3/16”

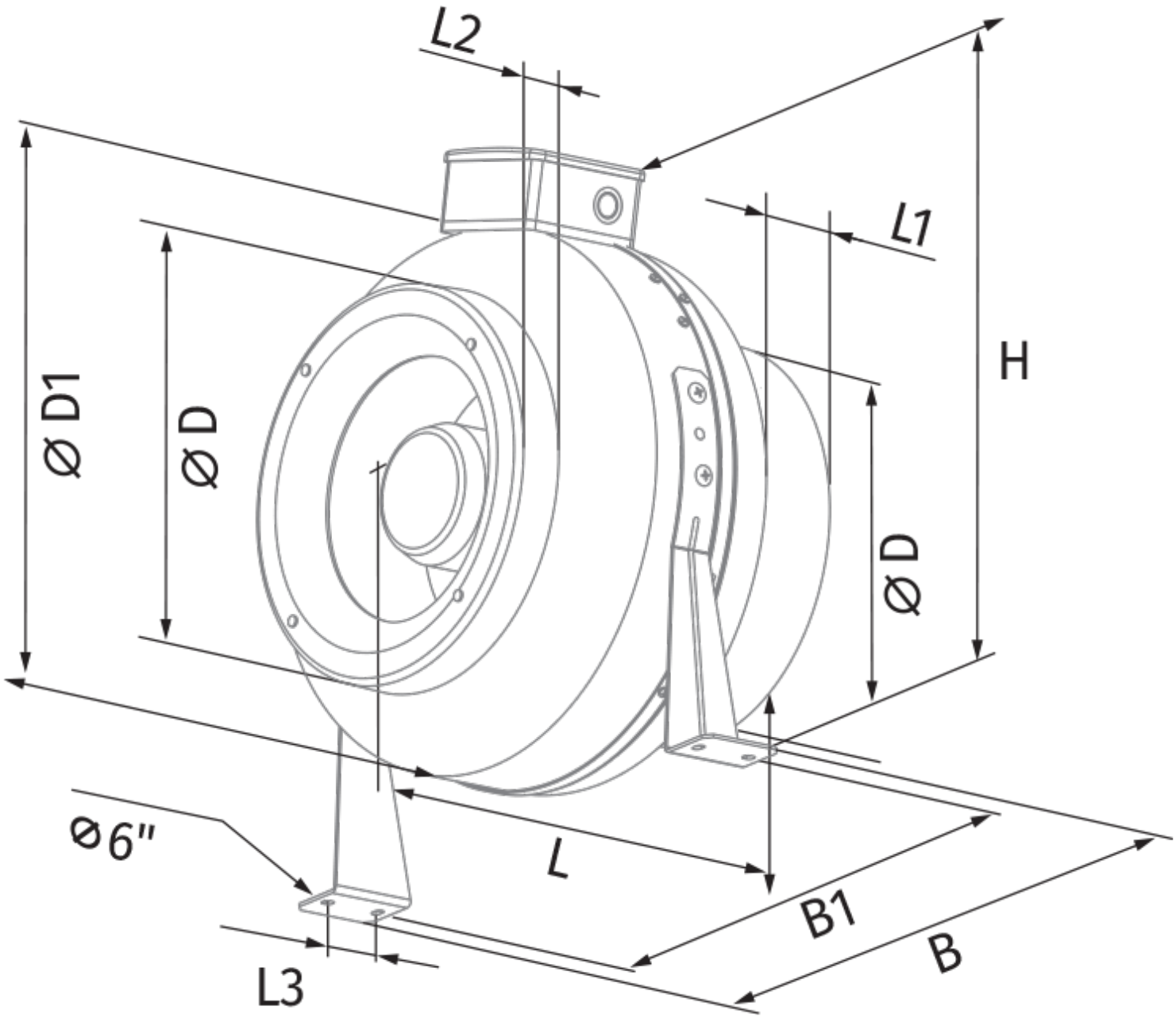
L2
L1
H
Ø D1
Ø D
Ø D
Ø6"
L
B1
B
L3