

Centro-M EC 150

Inline centrifugal fans with EC motor

• Impeller type: Centrifugal impeller with backward curved blades
• Casing material: Coated steel

	Unit of measurement	Centro-M EC 150
Connected air duct size	in	6
Minimum supply voltage	V	120
Maximum supply voltage	V	120
Power supply frequency	Hz	60
Rated power	W	75.1
Maximum unit current	A	1.08
Max Rated Airflow: CFM @ 0.2 in. w.g.	CFM	291
Rotation speed at 60hz	-	3336
Sound level	Sones	6.6
Weight	lb	8.2
Transported air temperature (max)	°C	60
Transported air temperature (min)	°C	-25
Ingress protection rating	-	IPX4
Ingress protection rating of the drive	-	IP44

Dimensions

Ø D	Ø D1	H	B	B1	L	L1	L2	L3
5 53/64”	12 1/64”	14 11/64”	14 11/64”	12 19/32”	7 7/8”	25/32”	63/64”	1 3/16”

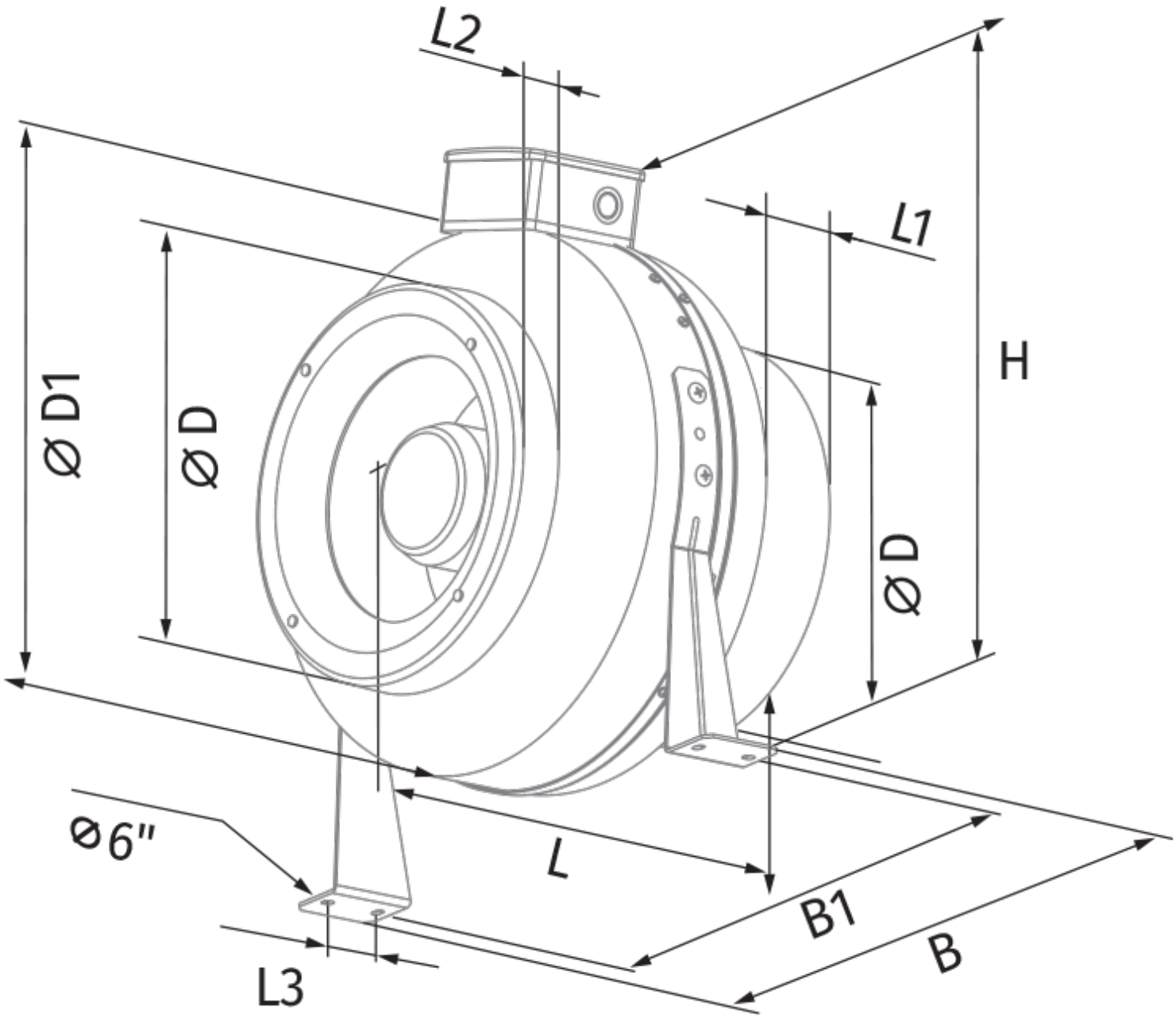
L2
L1
H
Ø D1
Ø D
Ø D
Ø6"
L
B1
B
L3