

Centro-M EC 250

Inline centrifugal fans with EC motor

• Impeller type: Centrifugal impeller with backward curved blades
• Casing material: Coated steel

	Unit of measurement	Centro-M EC 250
Connected air duct size	in	10
Minimum supply voltage	V	120
Maximum supply voltage	V	120
Power supply frequency	Hz	60
Rated power	W	133.6
Maximum unit current	A	1.89
Max Rated Airflow: CFM @ 0.2 in. w.g.	CFM	586
Rotation speed at 60hz	-	2628
Sound level	Sones	8.2
Weight	lb	12.8
Transported air temperature (max)	°C	60
Transported air temperature (min)	°C	-25
Ingress protection rating	-	IPX4
Ingress protection rating of the drive	-	IP44

Dimensions

Ø D	Ø D1	H	B	B1	L	L1	L2	L3
9 49/64”	13 37/64”	17 1/8”	15 35/64”	13 31/32”	9 27/32”	63/64”	1 3/16”	1 37/64”

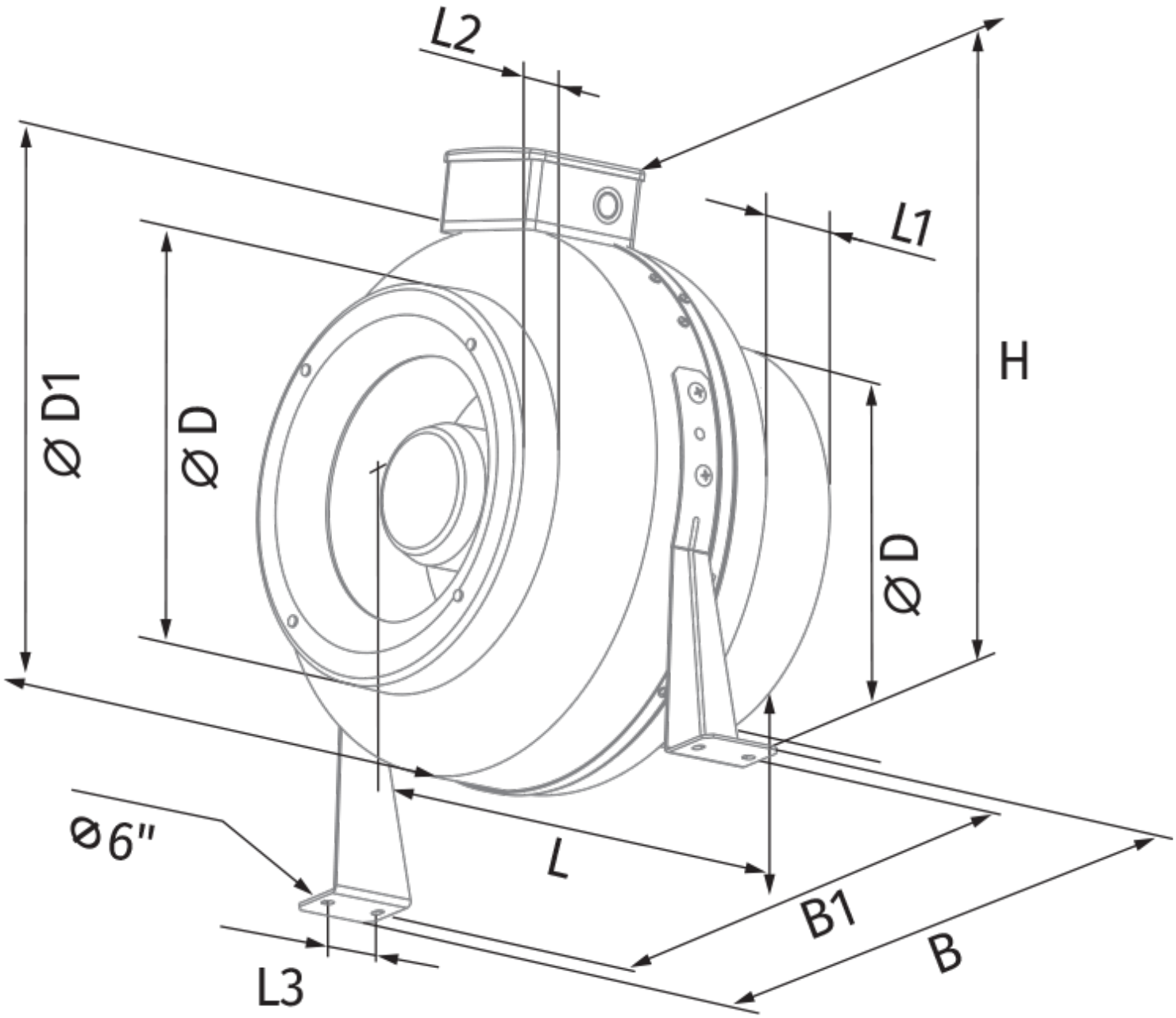
L2
L1
H
Ø D1
Ø D
Ø D
Ø6"
L
B1
B
L3