

Centro-M EC 305

Inline centrifugal fans with EC motor

• Impeller type: Centrifugal impeller with backward curved blades
• Casing material: Coated steel

	Unit of measurement	Centro-M EC 305
Connected air duct size	in	12
Minimum supply voltage	V	120
Maximum supply voltage	V	120
Power supply frequency	Hz	60
Rated power	W	173.5
Maximum unit current	A	2.41
Max Rated Airflow: CFM @ 0.2 in. w.g.	CFM	726
Rotation speed at 60hz	-	2796
Sound level	Sones	8.35
Weight	lb	15.8
Transported air temperature (max)	°C	60
Transported air temperature (min)	°C	-25
Ingress protection rating	-	IPX4
Ingress protection rating of the drive	-	IP44

Dimensions

Ø D	Ø D1	H	B	B1	L	L1	L2	L3
11 59/64”	15 15/16”	18 5/16”	17 29/32”	16 11/32”	10 15/64”	13/16”	1 3/16”	1 37/64”

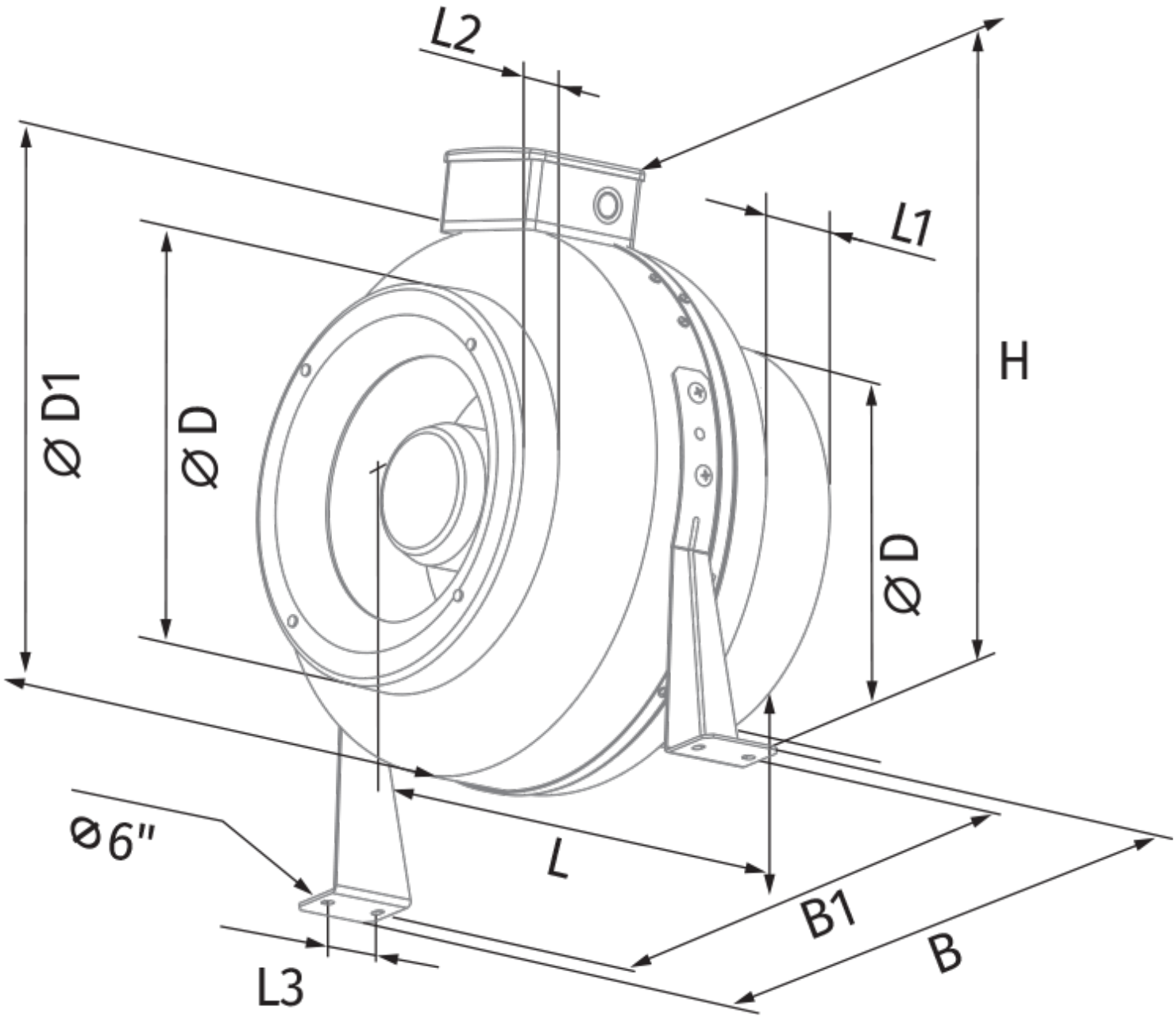
L2
L1
H
Ø D1
Ø D
Ø D
Ø6"
L
B1
B
L3