

ERV EC L 150 R

Compact horizontal high efficiency energy recovery ventilators with counterflow core: fresh air supply, top-tier energy recovery and filtration. Side-by-side air duct connections, suitable for wall or ceiling mounting

- Heat exchanger type: Counter flow
- Heat exchanger material: Enthalpy
- Supply filter: MERV 6 (optional MERV 13)
- Extract filter: MERV 6
- Sound-insulated casing
- Enthalpy heat exchanger
- Control: Built-in control panel
- Casing material: Aluzinc steel
- SRE: 87
- ASRE: 90

	Unit of measurement	ERV EC L 150 R
Connected air duct size	in	6
Minimum supply voltage	V	120
Maximum supply voltage	V	120
Power supply frequency	Hz	60
Rated power	W	170
Maximum unit current	A	2.1
Heat exchanger type	-	Counter flow
Heat exchanger material	-	Enthalpy
Supply filter	-	MERV 6 (optional MERV 13)
Extract filter	-	MERV 6
Airflow @ 0.4" WG	CFM	177
SRE	%	87
ASRE	%	90

Dimensions

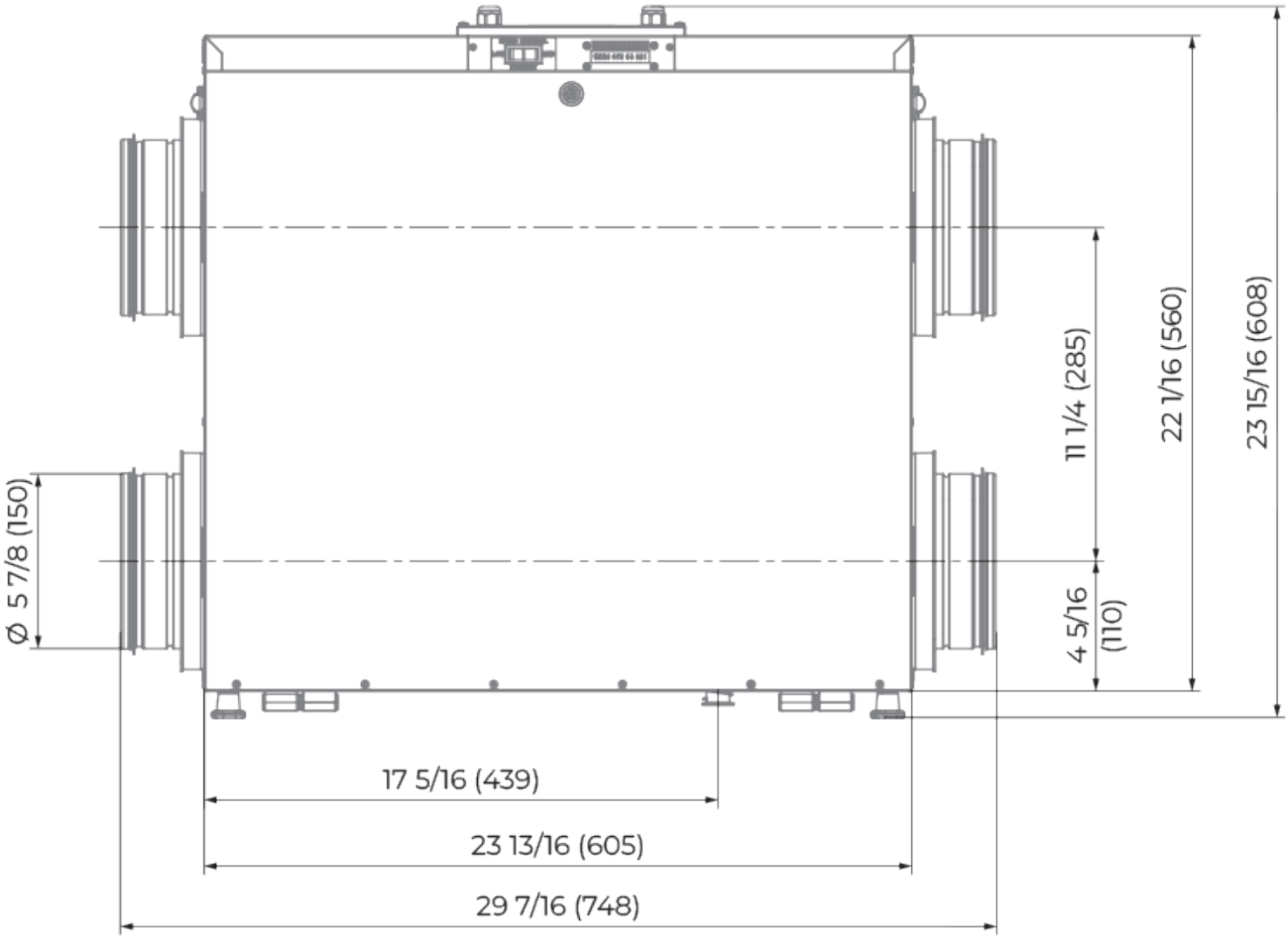
Ø 5 7/8 (150)
11 1/4 (285)
22 1/16 (560)
23 15/16 (608)
4 5/16 (110)
17 5/16 (439)
23 13/16 (605)
29 7/16 (748)

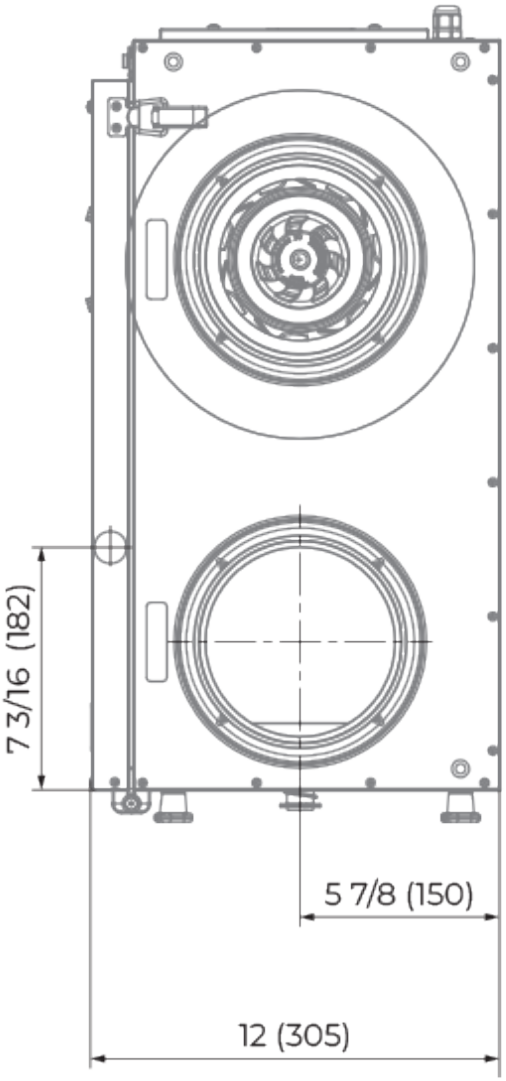
7 3/16 (182)
5 7/8 (150)
12 (305)