

ERV EC SR 200 R

Vertical high-efficiency energy recovery ventilators with counterflow core: fresh air supply, top-tier energy recovery and filtration. Top air duct connections, for wall or floor mounting

- Heat exchanger type: Counter flow
- Heat exchanger material: Enthalpy
- Supply filter: MERV 6 (optional MERV 13)
- Extract filter: MERV 6
- Sound-insulated casing
- Enthalpy heat exchanger
- Control: Built-in control panel
- Casing material: Aluzinc steel
- SRE: 80
- ASRE: 83

	Unit of measurement	ERV EC SR 200 R
Connected air duct size	in	6 1/8
Minimum supply voltage	V	120
Maximum supply voltage	V	120
Power supply frequency	Hz	60
Rated power	W	348
Maximum unit current	A	4.5
Heat exchanger type	-	Counter flow
Heat exchanger material	-	Enthalpy
Supply filter	-	MERV 6 (optional MERV 13)
Extract filter	-	MERV 6
Airflow @ 0.4" WG	CFM	252
SRE	%	80
ASRE	%	83

Dimensions

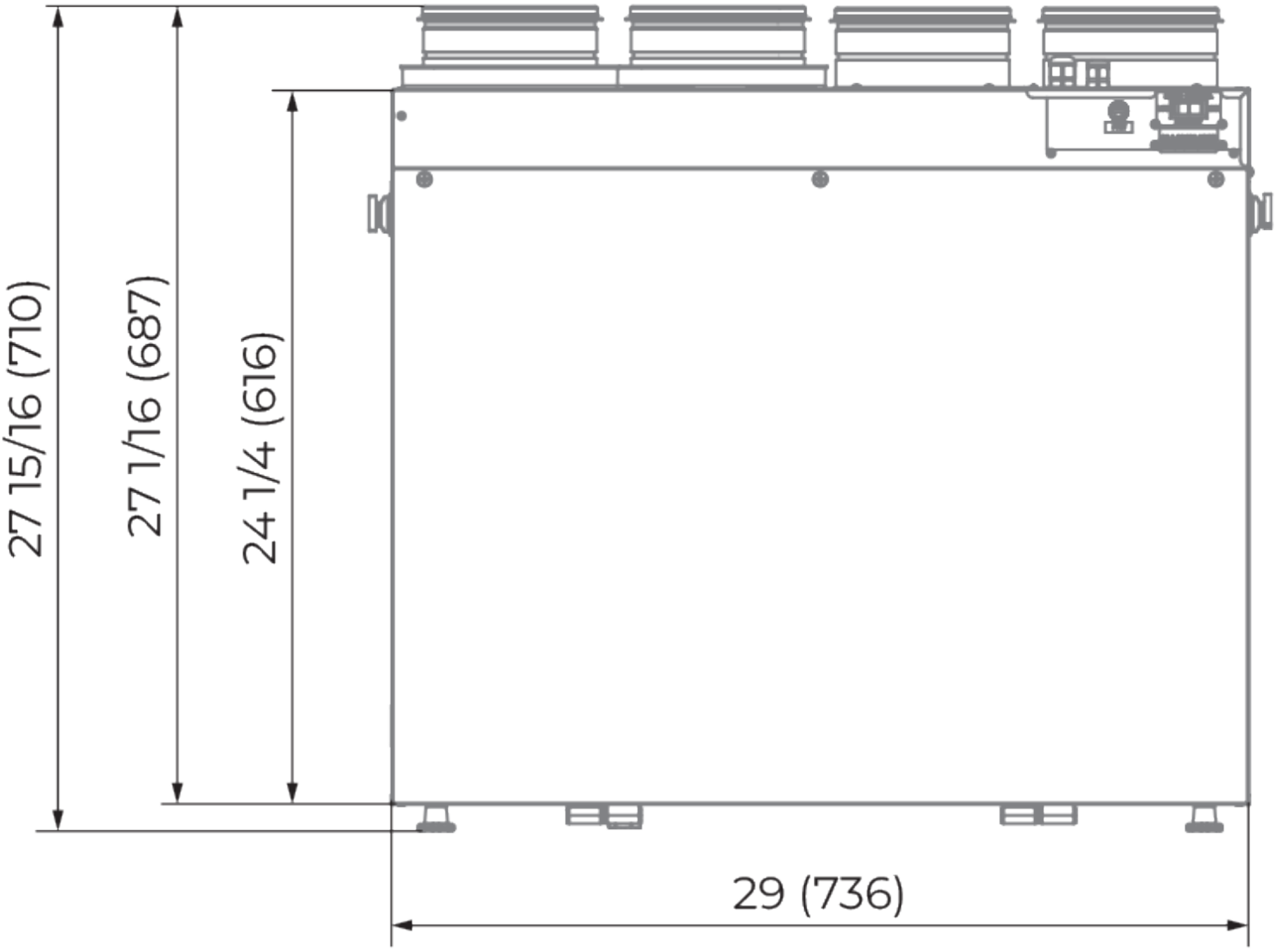
27 15/16 (710)
27 1/16 (687)
24 1/4 (616)
29 (736)

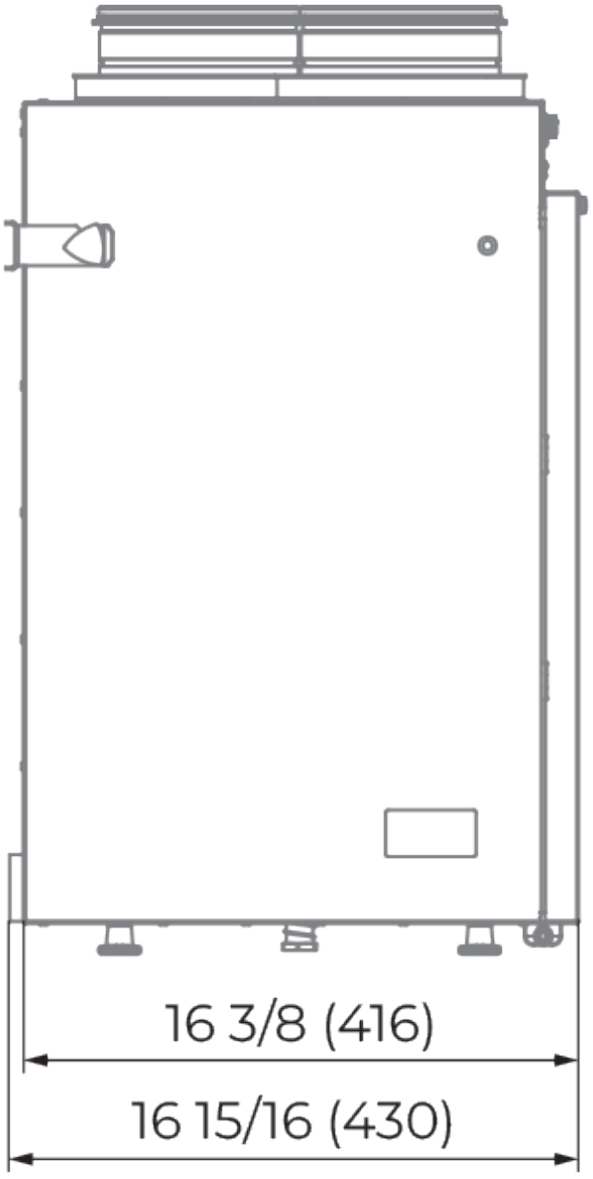
16 3/8 (416)
16 15/16 (430)

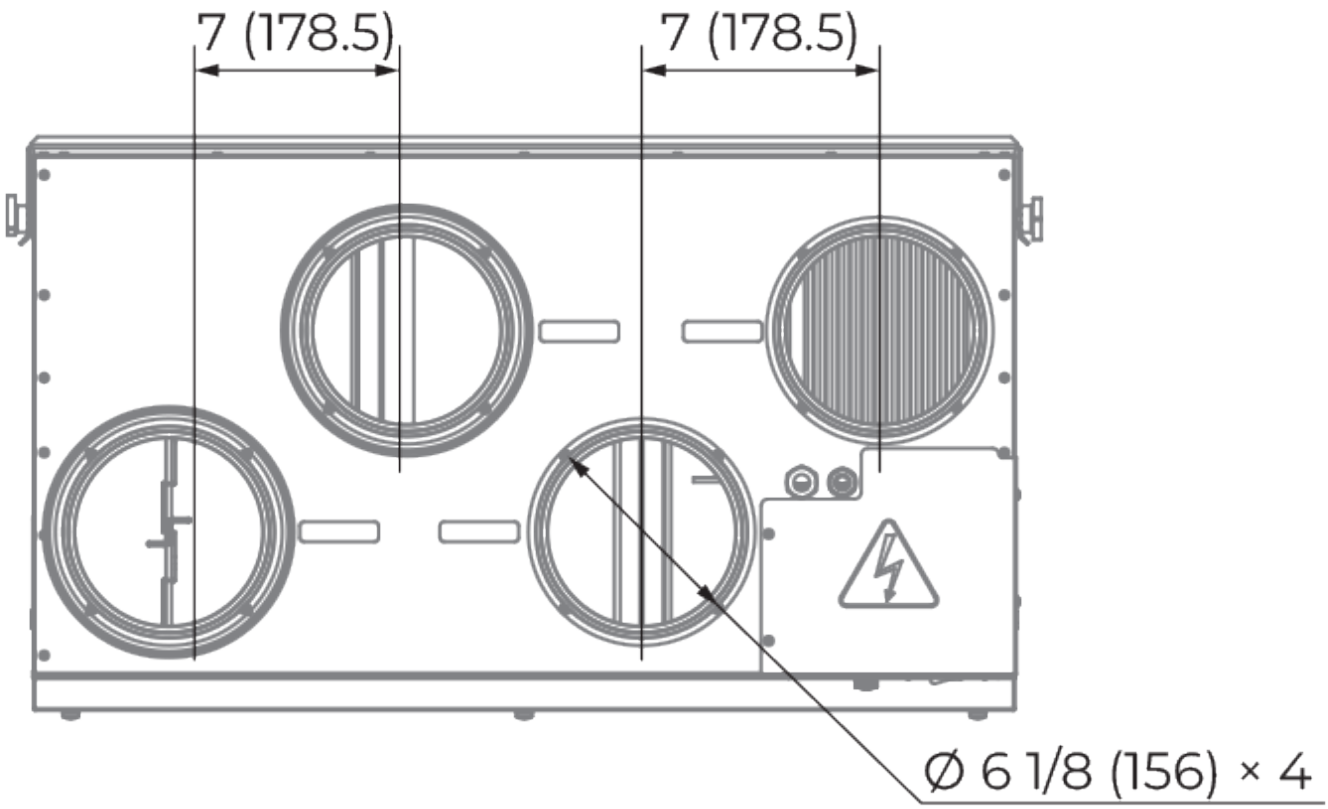
7 (178.5)
7 (178.5)
Ø 6 1/8 (156) × 4

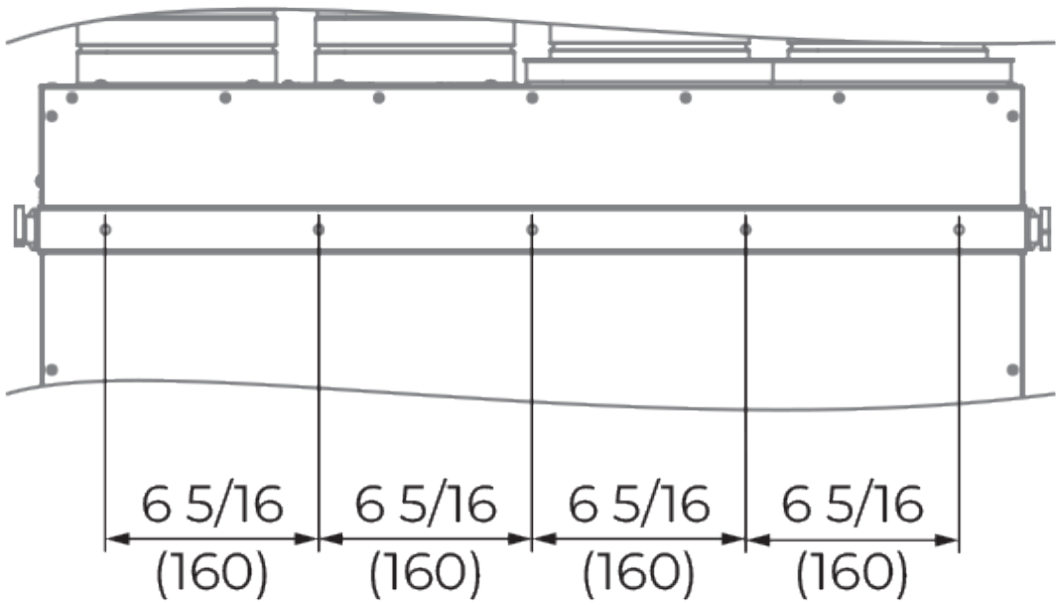
6 5/16
(160)
6 5/16
(160)
6 5/16
(160)
6 5/16
(160)