

# Freshbox 100

Single-room heat recovery unit

• Heat exchanger type: Counter flow
• Heat exchanger material: Polystyrene
• Supply filter: MERV8 + MERV14 (Option: MERV14 Carbon; HEPA Filter type C), MERV8 + MERV14 (Option: MERV14 Carbon; HEPA Filter type C)
• Extract filter: MERV8
• Sound-insulated casing
• Control: Built-in control panel
• Casing material: Coated steel
• Temperature sensor: Built-in
• Sound pressure level LpA at 10 ft: 1.75

| | Unit of measurement | Freshbox 100 | | |
|---|---|---|---|---|
| Connected air duct size | in | 4” | | |
| Phases | - | 1 | | |
| Minimum supply voltage | V | 110 | | |
| Maximum supply voltage | V | 240 | | |
| Power supply frequency | Hz | 50/60 | | |
| Rated power | W | 12 | 21 | 45 |
| Maximum unit current | A | 0.4 | | |
| Max Rated Airflow: CFM @ 0.1 in. w.g. | CFM | 18 | 35 | 59 |
| Rotation speed at 60hz | - | 2200 | | |
| Heat recovery efficiency | % | 98 | 92 | 89 |
| Heat exchanger type | - | Counter flow | | |
| Heat exchanger material | - | Polystyrene | | |
| Weight | lb | 68.5 | | |
| Supply filter | - | MERV8 + MERV14 (Option: MERV14 Carbon; HEPA Filter type C), MERV8 + MERV14 (Option: MERV14 Carbon; HEPA Filter type C) | | |
| Extract filter | - | MERV8 | | |
| Transported air temperature (max) | °C | 50 | | |
| Transported air temperature (min) | °C | -25 | | |
| Sound pressure level LpA at 10 ft | Sones | 0.25 | 0.5 | 1.75 |

## Dimensions

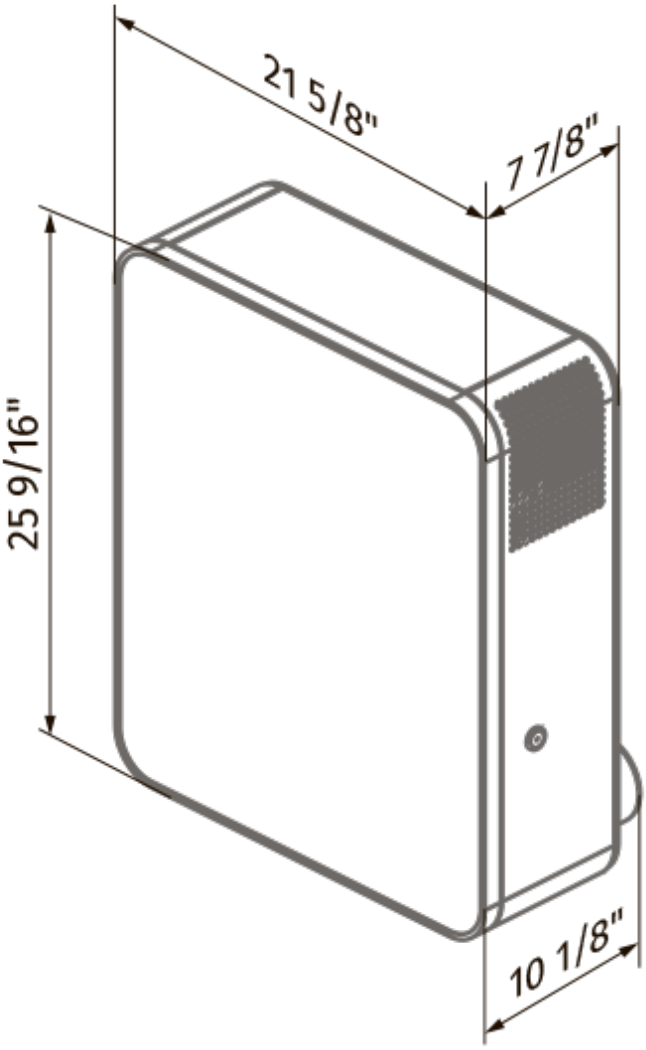


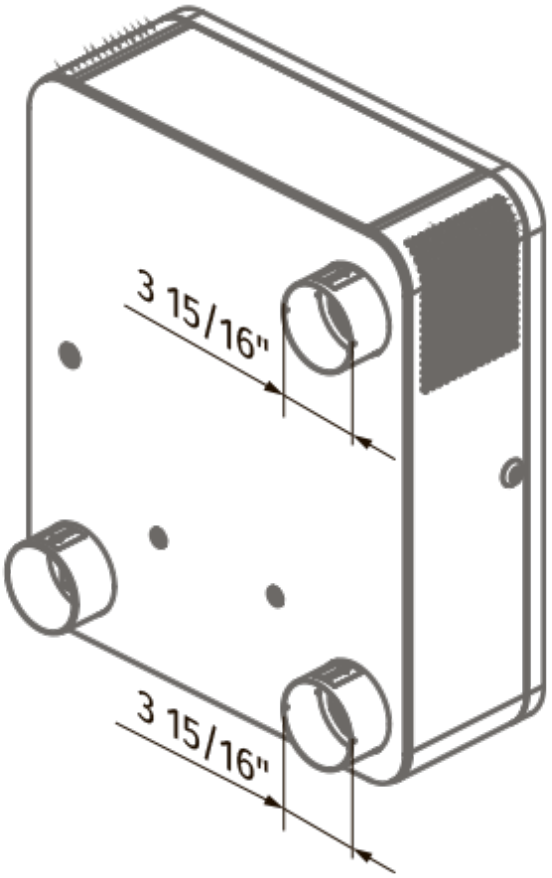

# Accessories

## Other accessories

| Name | Photo | Description |
|---|---|---|
| CD-1 |  | The sensor is designed for indoor carbon dioxide concentration measurement and respective air capacity regulation through the control output signal to the fan. Air capacity control based on $CO_2$ concentration is an efficient energy saving solution. |
| CD-2 |  | The sensor is designed for indoor carbon dioxide concentration measurement and respective air capacity regulation through the control output signal to the fan. Air capacity control based on $CO_2$ concentration is an efficient energy saving solution. |
| HR-S |  | The humidistat is designed for controlling humidification and/or dehumidification in ventilation, air conditioning and heating systems. Can also be used to alarm when the humidity exceeds or falls below a pre-set level. |