

Freshbox 100 ERV

Single-room heat recovery unit

- Heat exchanger type: Counter flow
- Heat exchanger material: Enthalpy
- Supply filter: MERV8 + MERV14 (Option: MERV14 Carbon; HEPA Filter type C), MERV8 + MERV14 (Option: MERV14 Carbon; HEPA Filter type C)
- Extract filter: MERV8
- Sound-insulated casing
- Enthalpy heat exchanger
- Control: Built-in control panel
- Casing material: Coated steel
- Temperature sensor: Built-in
- Sound pressure level LpA at 10 ft: 1.75

	Unit of measurement	Freshbox 100 ERV		
Connected air duct size	in	4”		
Phases	-	1		
Minimum supply voltage	V	110		
Maximum supply voltage	V	240		
Power supply frequency	Hz	50/60		
Rated power	W	12	21	45
Maximum unit current	A	0.4		
Max Rated Airflow: CFM @ 0.1 in. w.g.	CFM	18	35	59
Rotation speed at 60hz	-	2200		
Heat recovery efficiency	%	96	89	83
Heat exchanger type	-	Counter flow		
Heat exchanger material	-	Enthalpy		
Weight	lb	68.5		
Supply filter	-	MERV8 + MERV14 (Option: MERV14 Carbon; HEPA Filter type C), MERV8 + MERV14 (Option: MERV14 Carbon; HEPA Filter type C)		
Extract filter	-	MERV8		
Transported air temperature (max)	°C	50		
Transported air temperature (min)	°C	-25		
Sound pressure level LpA at 10 ft	Sones	0.25	0.5	1.75

Dimensions

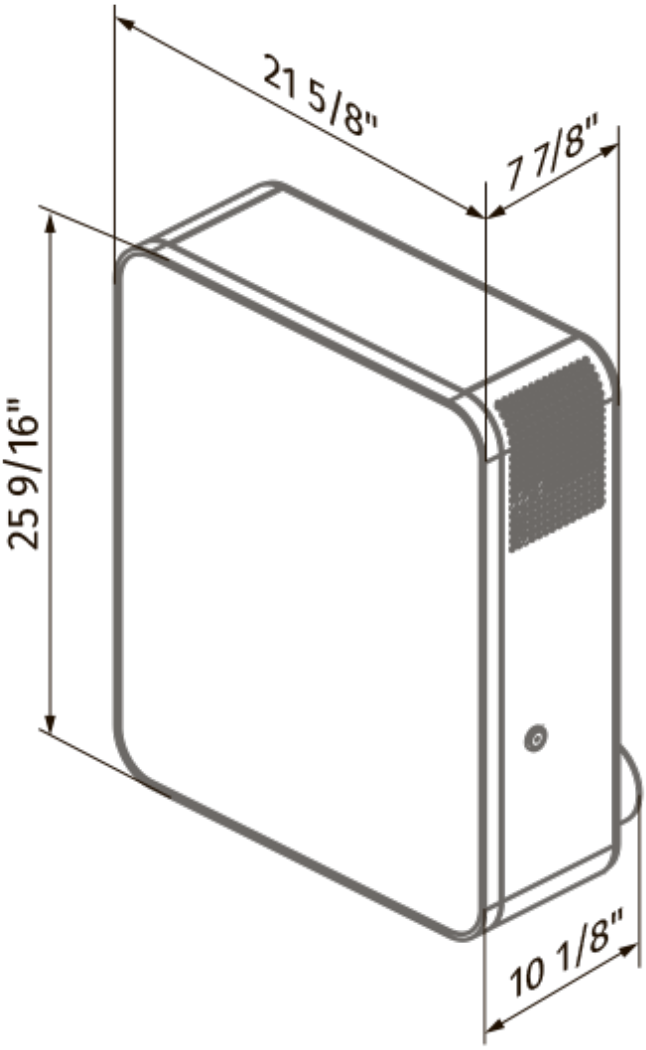

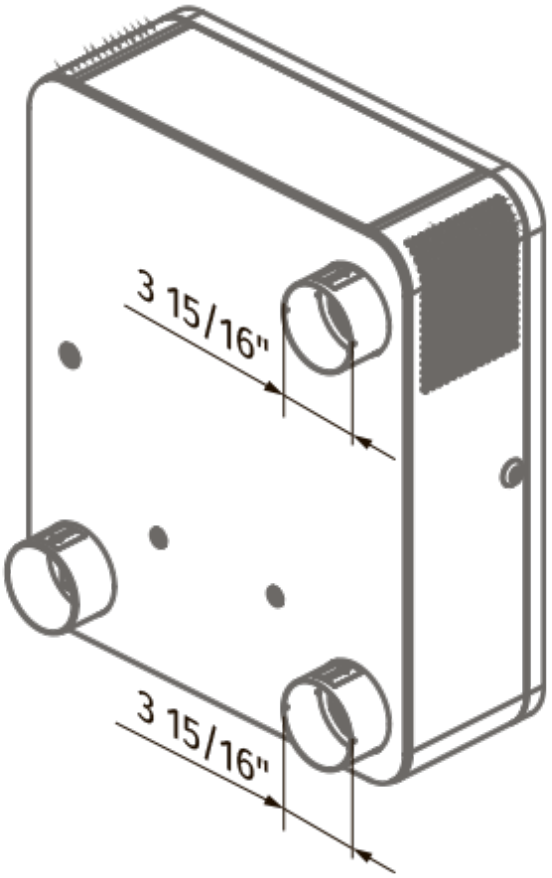

Accessories

Other accessories

Name	Photo	Description
CD-1		The sensor is designed for indoor carbon dioxide concentration measurement and respective air capacity regulation through the control output signal to the fan. Air capacity control based on CO_2 concentration is an efficient energy saving solution.
CD-2		The sensor is designed for indoor carbon dioxide concentration measurement and respective air capacity regulation through the control output signal to the fan. Air capacity control based on CO_2 concentration is an efficient energy saving solution.
HR-S		The humidistat is designed for controlling humidification and/or dehumidification in ventilation, air conditioning and heating systems. Can also be used to alarm when the humidity exceeds or falls below a pre-set level.