

HRV EC D 130 R

Compact suspended high efficiency heat recovery ventilators with counterflow core: fresh air supply, top-tier energy recovery and filtration. Side-by-side air duct connections, suitable for ceiling or wall mounting

- Heat exchanger type: Counter flow
- Supply filter: MERV 6 (optional MERV 13)
- Extract filter: MERV 6
- Sound-insulated casing
- Control: Built-in control panel
- Casing material: Aluzinc steel
- SRE: 90
- ASRE: 95

	Unit of measurement	HRV EC D 130 R
Connected air duct size	in	5
Minimum supply voltage	V	120
Maximum supply voltage	V	120
Power supply frequency	Hz	60
Rated power	W	115
Maximum unit current	A	1.5
Heat exchanger type	-	Counter flow
Supply filter	-	MERV 6 (optional MERV 13)
Extract filter	-	MERV 6
Airflow @ 0.4" WG	CFM	122
SRE	%	90
ASRE	%	95

Dimensions

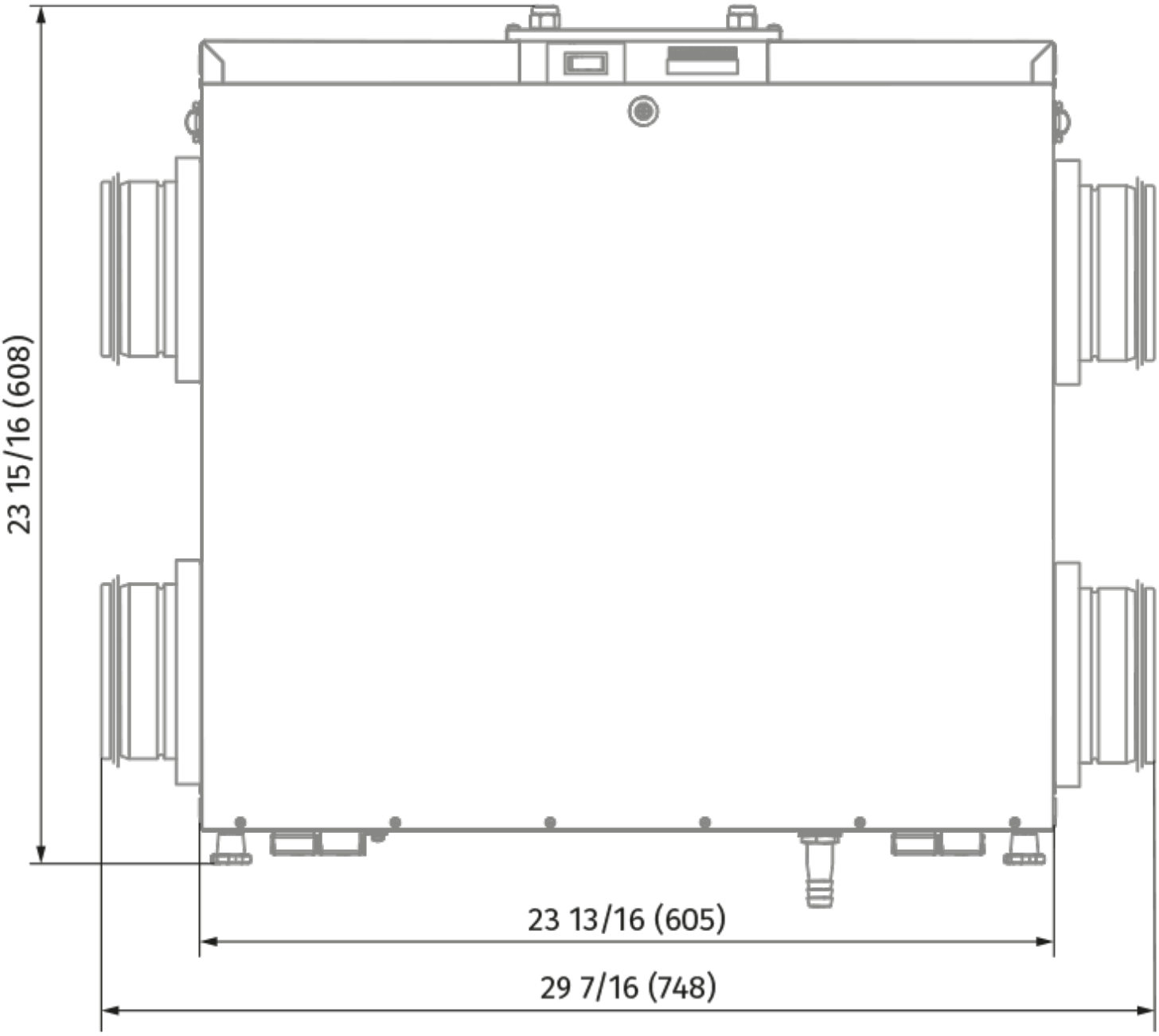
23 15/16 (608)
23 13/16 (605)
29 7/16 (748)

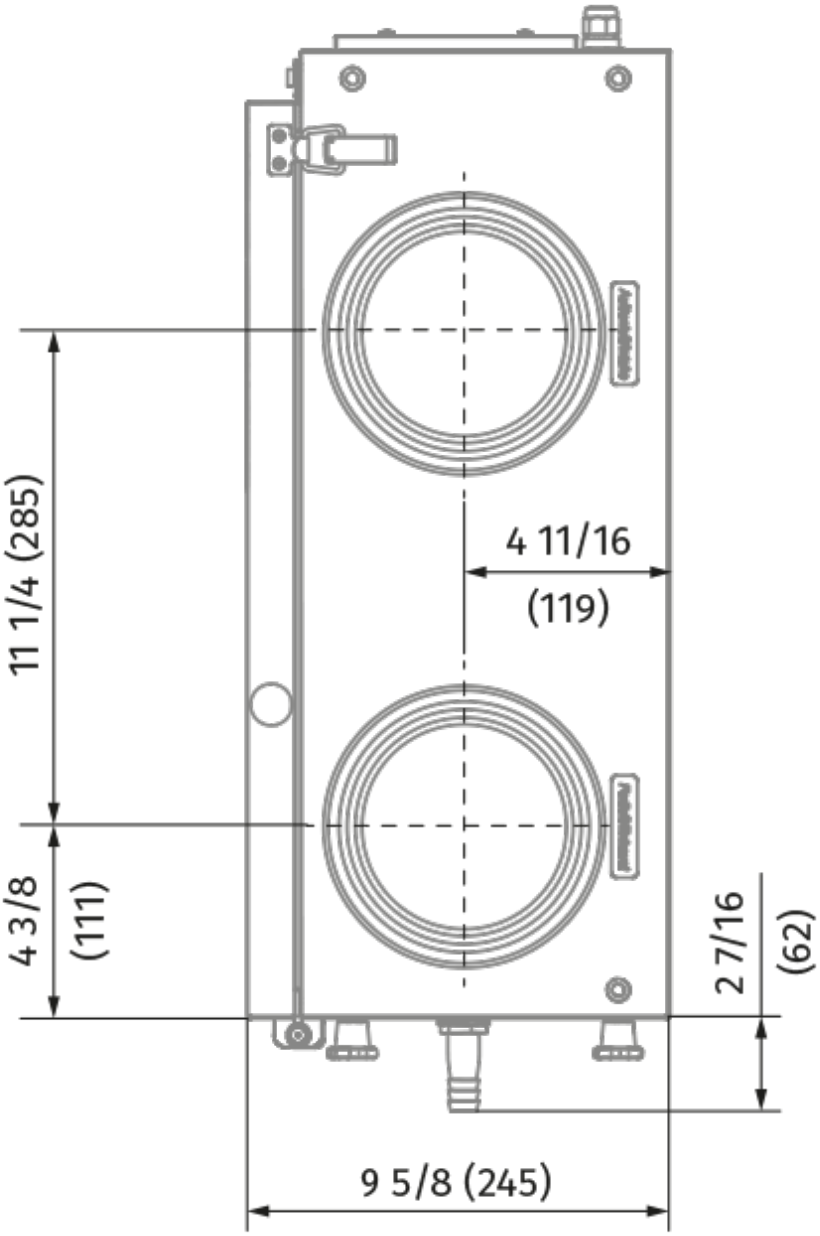
11 1/4 (285)
4 11/16
(119)
4 3/8
(111)
2 7/16
(62)
9 5/8 (245)

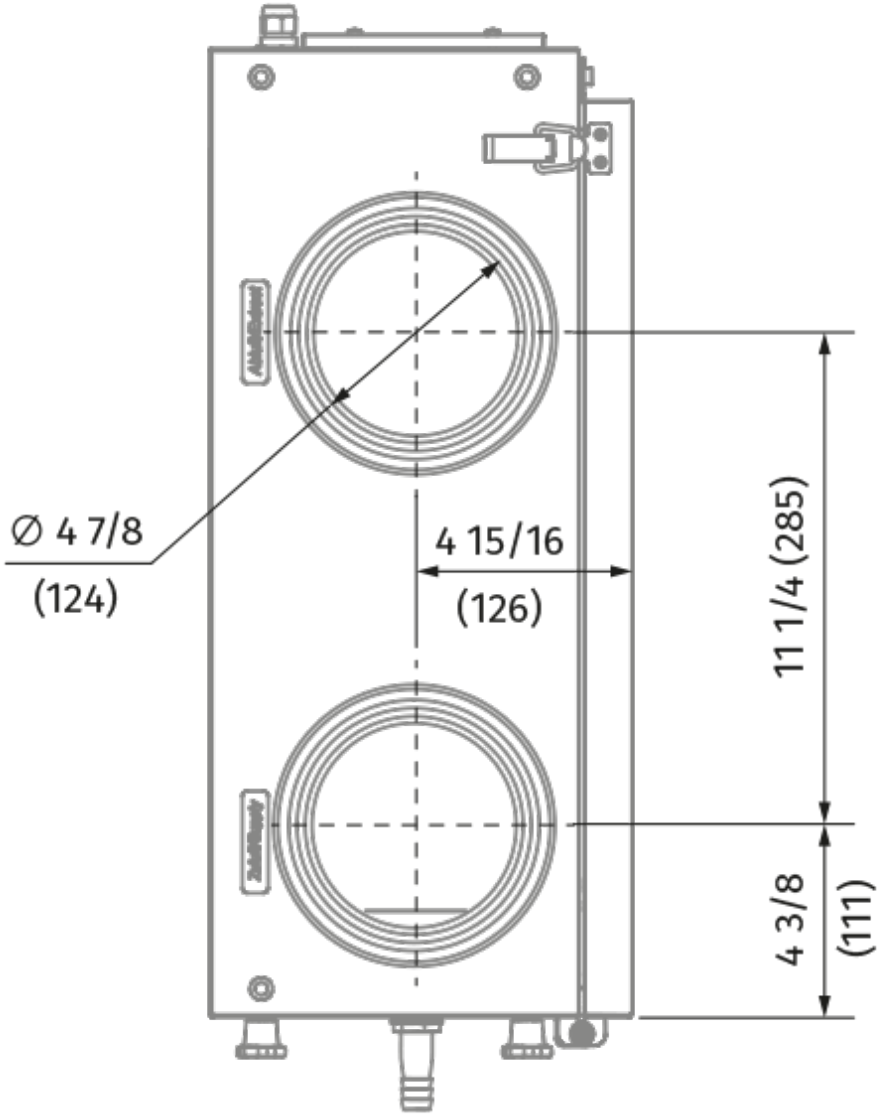
∅ 4 7/8
(124)
4 15/16
(126)
11 1/4 (285)
4 3/8
(111)