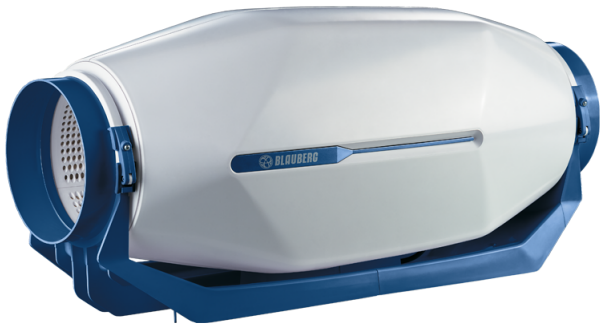

inWave 100/125 (spigot 5")

Sound-insulated inline mixed-flow fans

- Sound-insulated casing
- Impeller type: Mixed-flow
- Casing material: Plastic

	Unit of measurement	inWave 100/125 (spigot 5")	
Speed	-	1	2
Connected air duct size	in	5	
Minimum supply voltage	V	120	
Maximum supply voltage	V	120	
Power supply frequency	Hz	60	
Rated power	W	22	29
Maximum unit current	A	0.2	0.24
Max Rated Airflow: CFM @ 0.2 in. w.g.	CFM	121	167
Rotation speed at 60hz	-	2475	3060
Sound level	Sones	1.4	2
Weight	lb	11	

Dimensions

Ø D	H	L	W
4 7/8”	10 3/4”	26 3/4”	10”

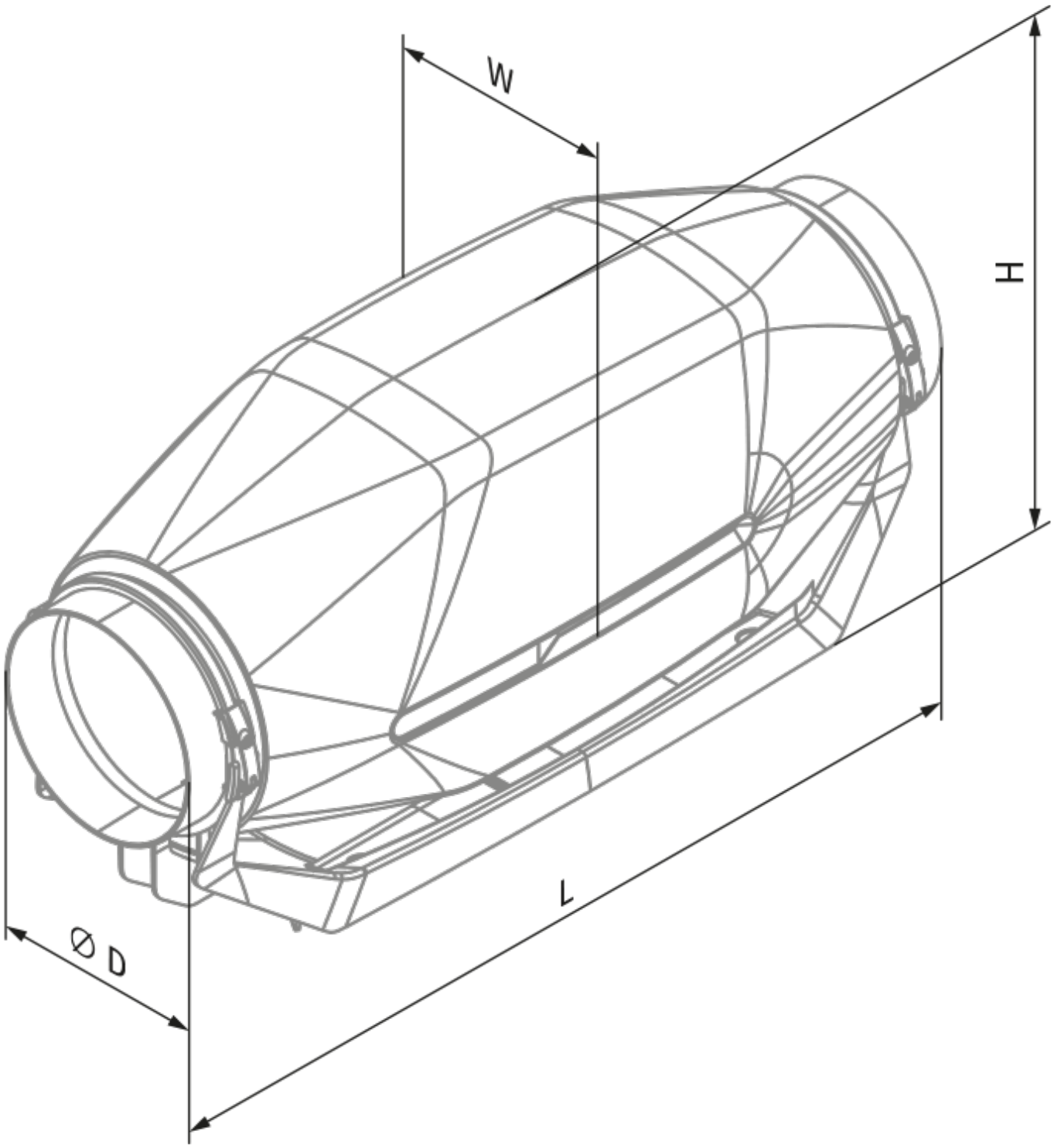
W
H
L
Ø D