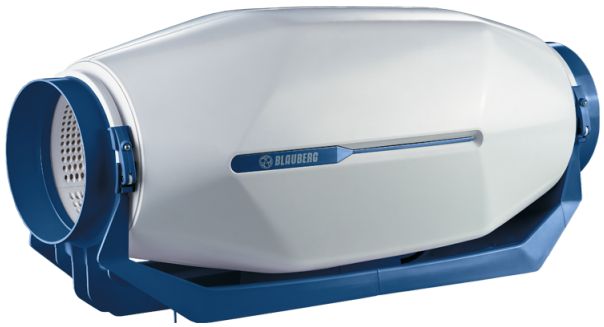

inWave 150/160

Sound-insulated inline mixed-flow fans

- Sound-insulated casing
- Impeller type: Mixed-flow
- Casing material: Plastic

	Unit of measurement	inWave 150/160	
Speed	-	1	2
Connected air duct size	in	6	
Minimum supply voltage	V	120	
Maximum supply voltage	V	120	
Power supply frequency	Hz	60	
Rated power	W	53	68.5
Maximum unit current	A	0.45	0.57
Max Rated Airflow: CFM @ 0.2 in. w.g.	CFM	158	265
Rotation speed at 60hz	-	1800	2540
Sound level	Sones	1.5	2.5
Weight	lb	11	

Dimensions

Ø D	H	L	W
5 7/8”	10 3/4”	23 7/8”	10”

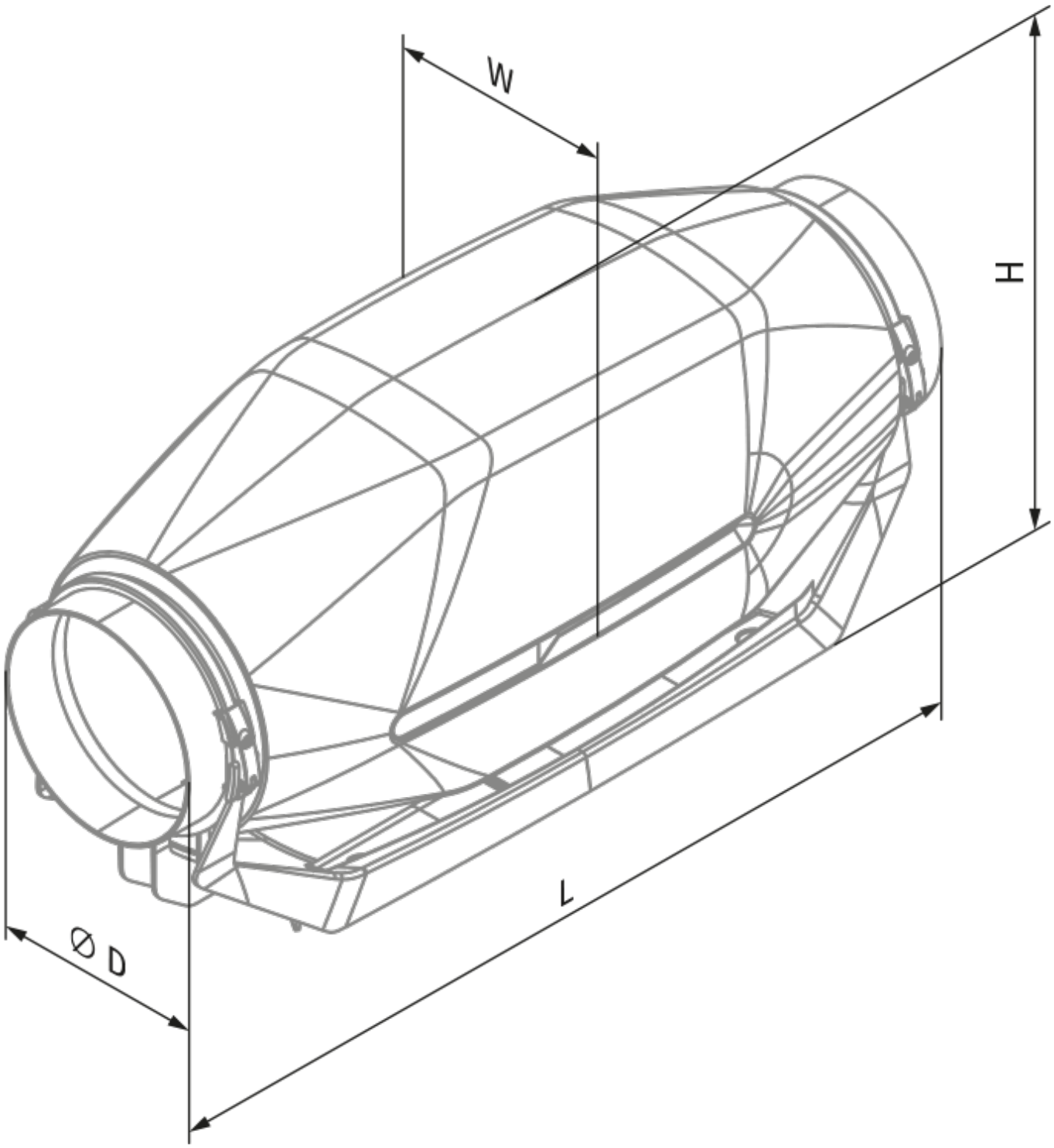
W
H
L
Ø D