

Iso-Mix 100

Sound-insulated inline mixed-flow fans

- Impeller type: Mixed-flow
- Casing material: Coated steel
- Installation in any position

	Unit of measurement	Iso-Mix 100	
Speed	-	1	2
Connected air duct size	in	4”	
Minimum supply voltage	V	120	
Maximum supply voltage	V	120	
Power supply frequency	Hz	60	
Rated power	W	22	28
Maximum unit current	A	0.2	0.24
Max Rated Airflow: CFM @ 0.2 in. w.g.	CFM	62	97
Rotation speed at 60hz	-	2065	2363
Sound level	Sones	0.3	1.2
Impeller material	-	Plastic	

Dimensions

ØD	B	B1	H	L
3 7/8”	8 7/16”	9 9/16”	9 5/16”	19 7/8”

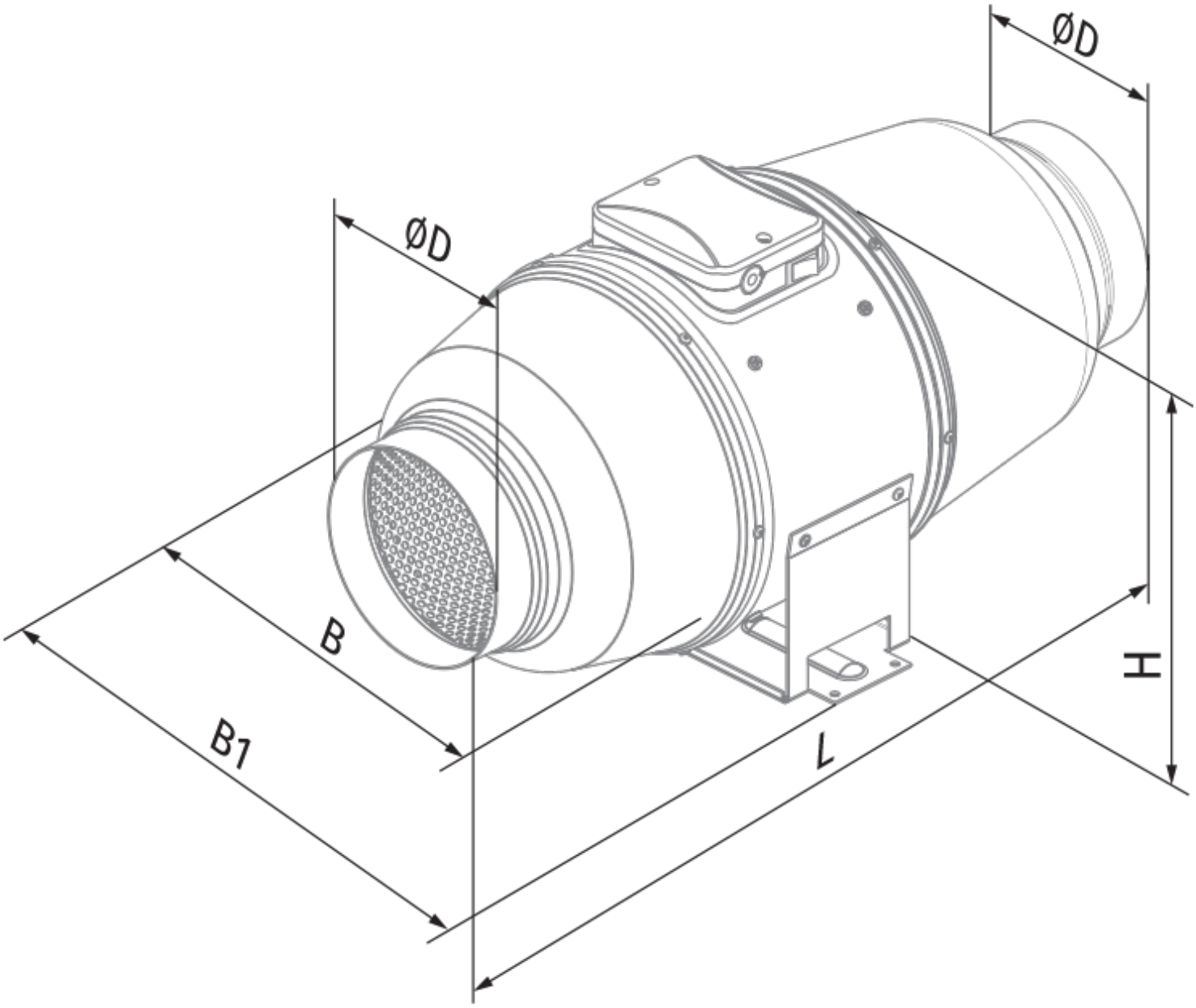
ØD
ØD
B
B1
L
H