

Iso-Mix 125

Sound-insulated inline mixed-flow fans

- Impeller type: Mixed-flow
- Casing material: Coated steel
- Installation in any position

	Unit of measurement	Iso-Mix 125	
Speed	-	1	2
Connected air duct size	in	5”	
Minimum supply voltage	V	120	
Maximum supply voltage	V	120	
Power supply frequency	Hz	60	
Rated power	W	23	35
Maximum unit current	A	0.22	0.3
Max Rated Airflow: CFM @ 0.2 in. w.g.	CFM	68	158
Rotation speed at 60hz	-	1990	2303
Sound level	Sones	0.4	0.9
Impeller material	-	Plastic	

Dimensions

ØD	B	B1	H	L
4 13/16”	8 7/16”	9 9/16”	9 5/16”	18 11/16”

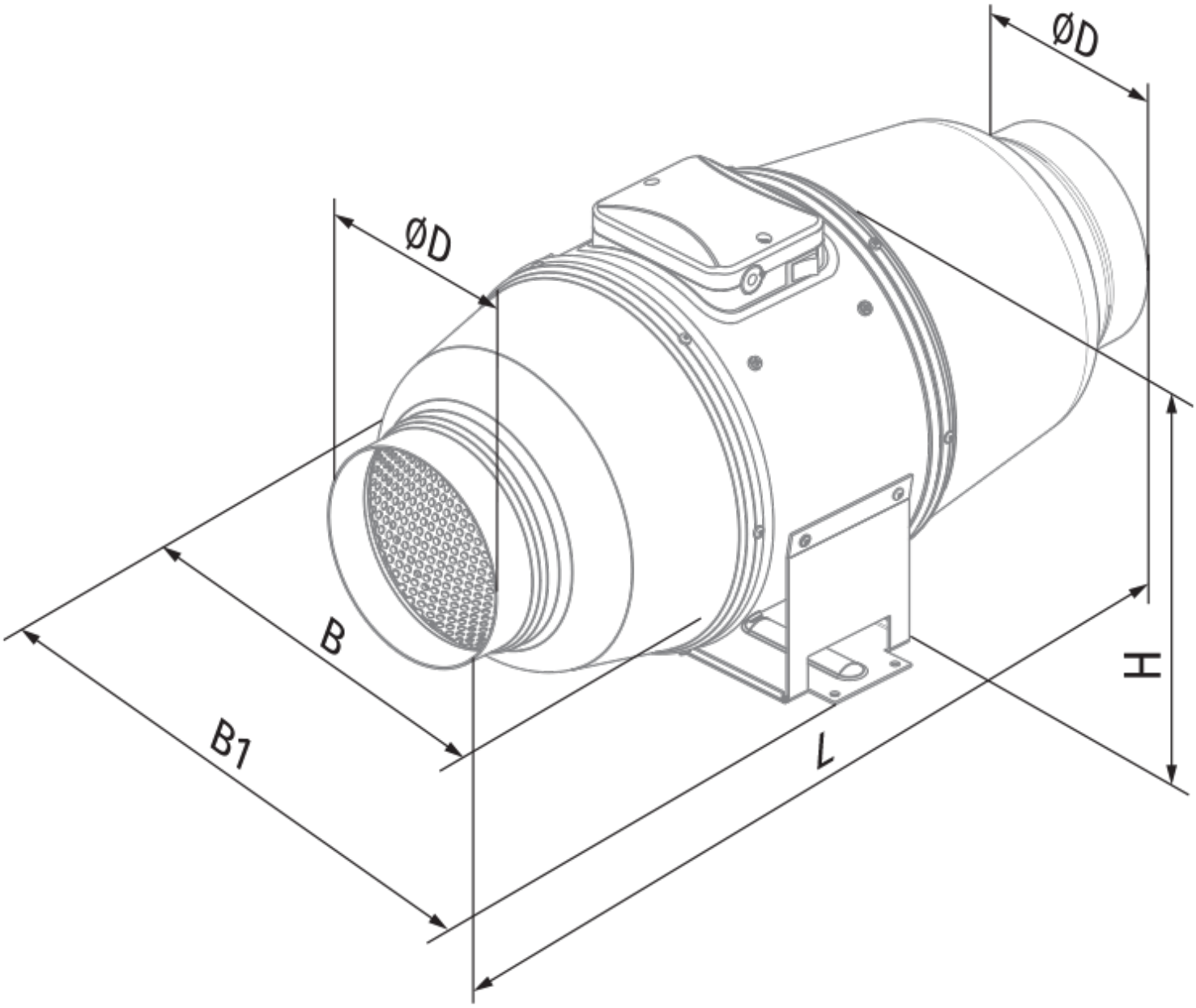
ØD
ØD
B
B1
L
H