

Iso-Mix 200

Sound-insulated inline mixed-flow fans

- Impeller type: Mixed-flow
- Casing material: Coated steel
- Installation in any position

	Unit of measurement	Iso-Mix 200	
Speed	-	1	2
Connected air duct size	in	8”	
Minimum supply voltage	V	120	
Maximum supply voltage	V	120	
Power supply frequency	Hz	60	
Rated power	W	70	110
Maximum unit current	A	0.58	0.93
Max Rated Airflow: CFM @ 0.2 in. w.g.	CFM	294	432
Rotation speed at 60hz	-	1990	2303
Sound level	Sones	0.7	2.0
Impeller material	-	Plastic	

Dimensions

ØD	B	B1	H	L
7 13/16”	11 9/16”	15 3/16”	11 5/8”	20 7/16”

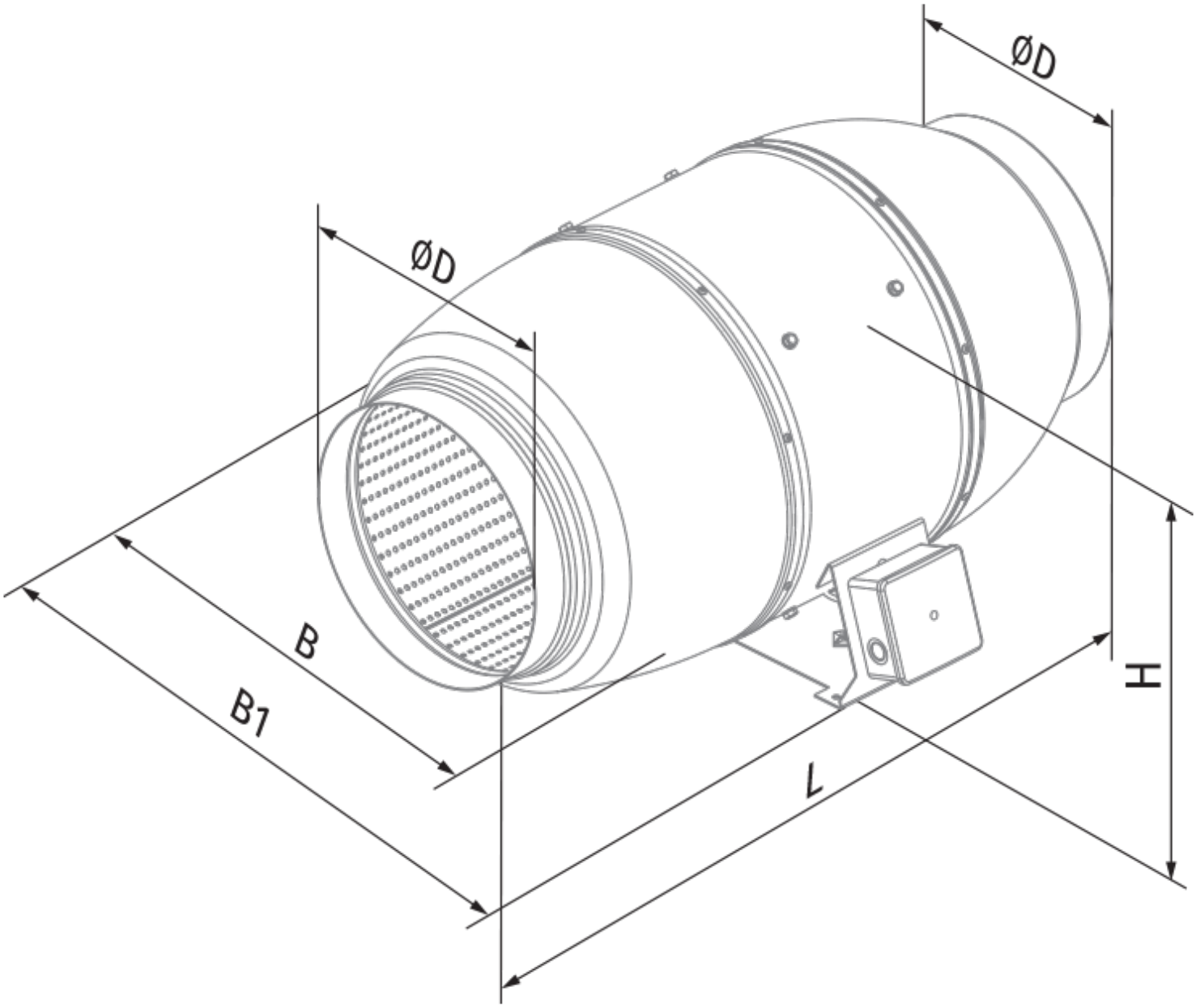
ØD
ØD
B
B1
L
H