

Iso-Mix 250

Sound-insulated inline mixed-flow fans

- Impeller type: Mixed-flow
- Casing material: Coated steel
- Installation in any position

	Unit of measurement	Iso-Mix 250	
Speed	-	1	2
Connected air duct size	in	10”	
Minimum supply voltage	V	120	
Maximum supply voltage	V	120	
Power supply frequency	Hz	60	
Rated power	W	130	200
Maximum unit current	A	1.11	1.68
Max Rated Airflow: CFM @ 0.2 in. w.g.	CFM	630	866
Rotation speed at 60hz	-	1847	2570
Sound level	Sones	2.0	4.0
Impeller material	-	Plastic	

Dimensions

ØD	B	B1	H	L
9 3/4”	14 1/8”	17 1/2”	14 3/16”	25 3/16”

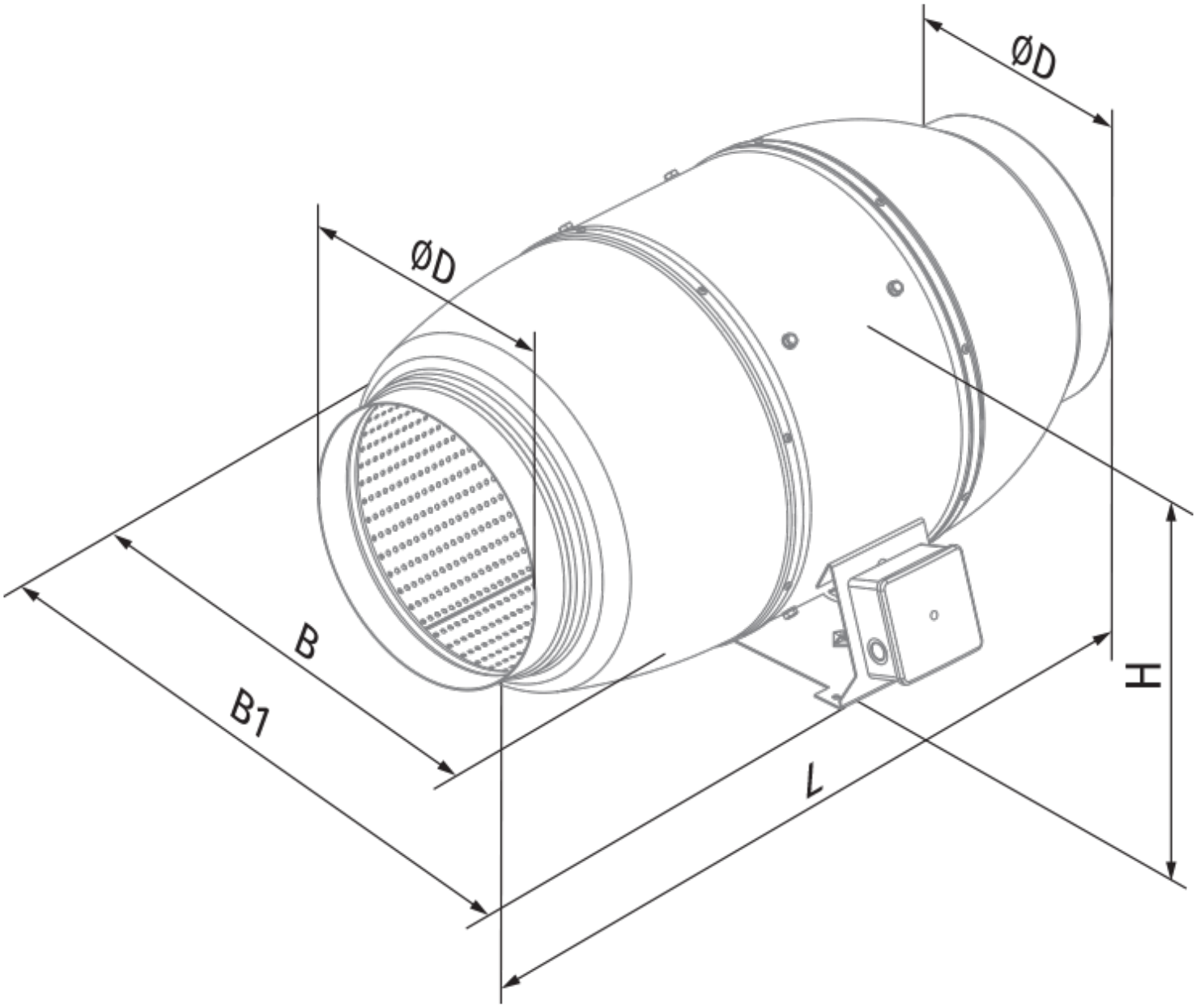
ØD
ØD
B
B1
L
H