

Iso-Mix 315

Sound-insulated inline mixed-flow fans

- Impeller type: Mixed-flow
- Casing material: Coated steel
- Installation in any position

	Unit of measurement	Iso-Mix 315	
Speed	-	1	2
Connected air duct size	in	12 3/8”	
Minimum supply voltage	V	120	
Maximum supply voltage	V	120	
Power supply frequency	Hz	60	
Rated power	W	236	353
Maximum unit current	A	1.95	2.95
Max Rated Airflow: CFM @ 0.2 in. w.g.	CFM	770	999
Rotation speed at 60hz	-	1847	2570
Sound level	Sones	2.0	3.5
Impeller material	-	Plastic	

Dimensions

ØD	B	B1	H	L
12 5/16”	17”	20 1/2”	17 1/16”	31 7/8”

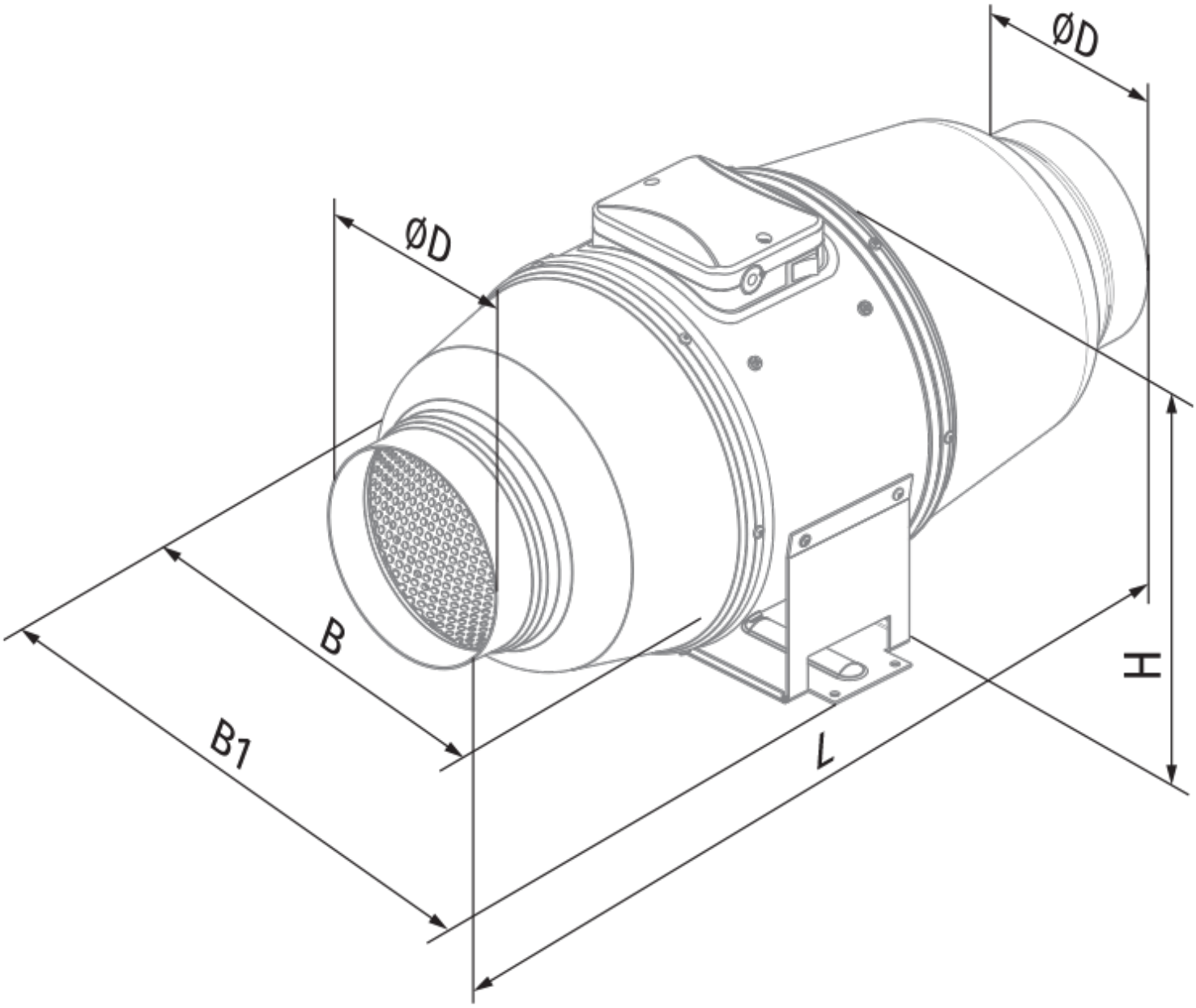
ØD
ØD
B
B1
L
H