

Primo 355

Inline mixed flow fans

- Impeller type: Mixed-flow
- Casing material: Plastic
- Installation in any position

	Unit of measurement	Primo 355
Minimum supply voltage	V	120
Maximum supply voltage	V	120
Power supply frequency	Hz	60
Rated power	W	198
Maximum unit current	A	1.76
Max Rated Airflow: CFM @ 0.2 in. w.g.	CFM	1370
Rotation speed at 60hz	-	1516
Sound level	Sones	2.6
Weight	lb	33
Impeller material	-	Plastic

Dimensions

Ø D	Ø D1	A	H
13 3/4”	16”	14 5/8”	18 7/16”

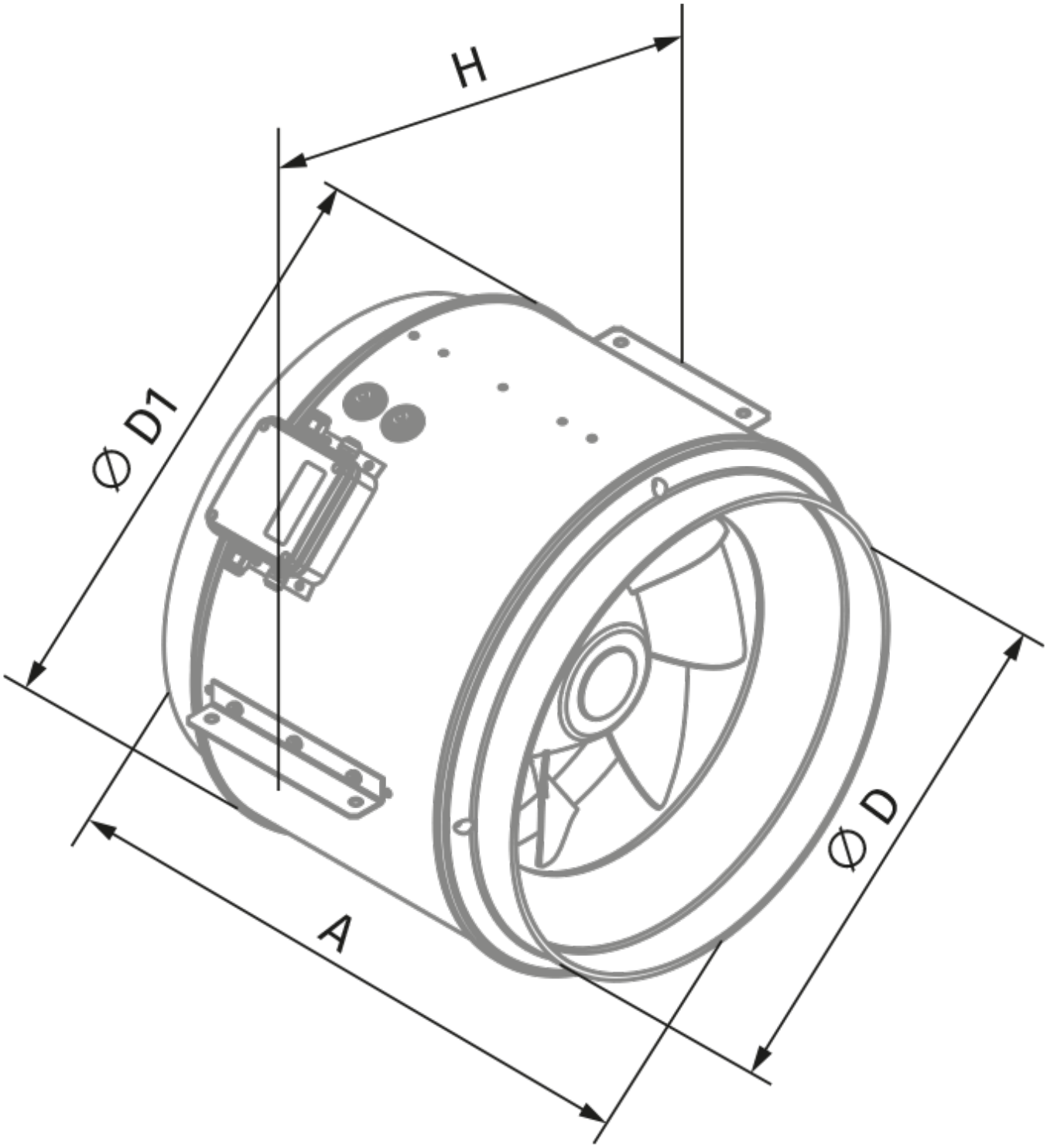
H
Ø D1
A
Ø D