

Primo 400

Inline mixed flow fans

- Impeller type: Mixed-flow
- Casing material: Plastic
- Installation in any position

	Unit of measurement	Primo 400
Minimum supply voltage	V	120
Maximum supply voltage	V	120
Power supply frequency	Hz	60
Rated power	W	309
Maximum unit current	A	2.7
Max Rated Airflow: CFM @ 0.2 in. w.g.	CFM	1850
Rotation speed at 60hz	-	1378
Sound level	Sones	2.7
Weight	lb	41
Impeller material	-	Plastic

Dimensions

Ø D	Ø D1	A	H
15 9/16”	17 3/4”	16 5/16”	20 3/16”

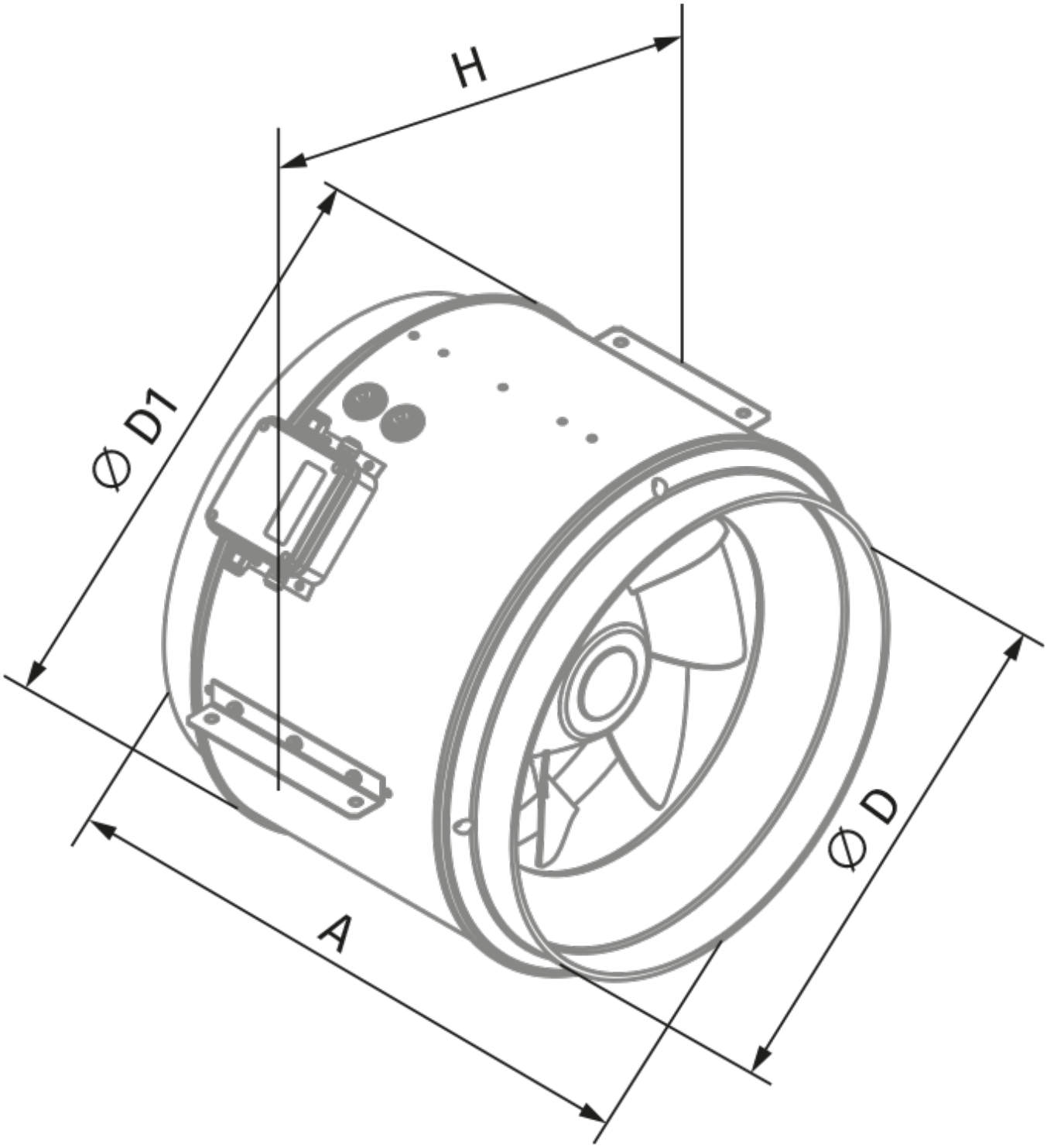
H
Ø D1
A
Ø D