

Turbo-E 100

Inline mixed-flow fans

- Impeller type: Mixed-flow
- Casing material: Polypropylene

	Unit of measurement	Turbo-E 100	
Speed	-	1	2
Connected air duct size	in	4	
Minimum supply voltage	V	120	
Maximum supply voltage	V	120	
Power supply frequency	Hz	60	
Rated power	W	25	38
Maximum unit current	A	0.29	0.45
Max Rated Airflow: CFM @ 0.2 in. w.g.	CFM	50	100
Rotation speed at 60hz	-	2527	2584
Sound level	Sones	1.1	2.5
Weight	lb	3.1	

Dimensions

Ø D	Ø D1	B	H	L
3 3/4”	5 1/2”	6 9/16”	7 1/2”	9 11/16”

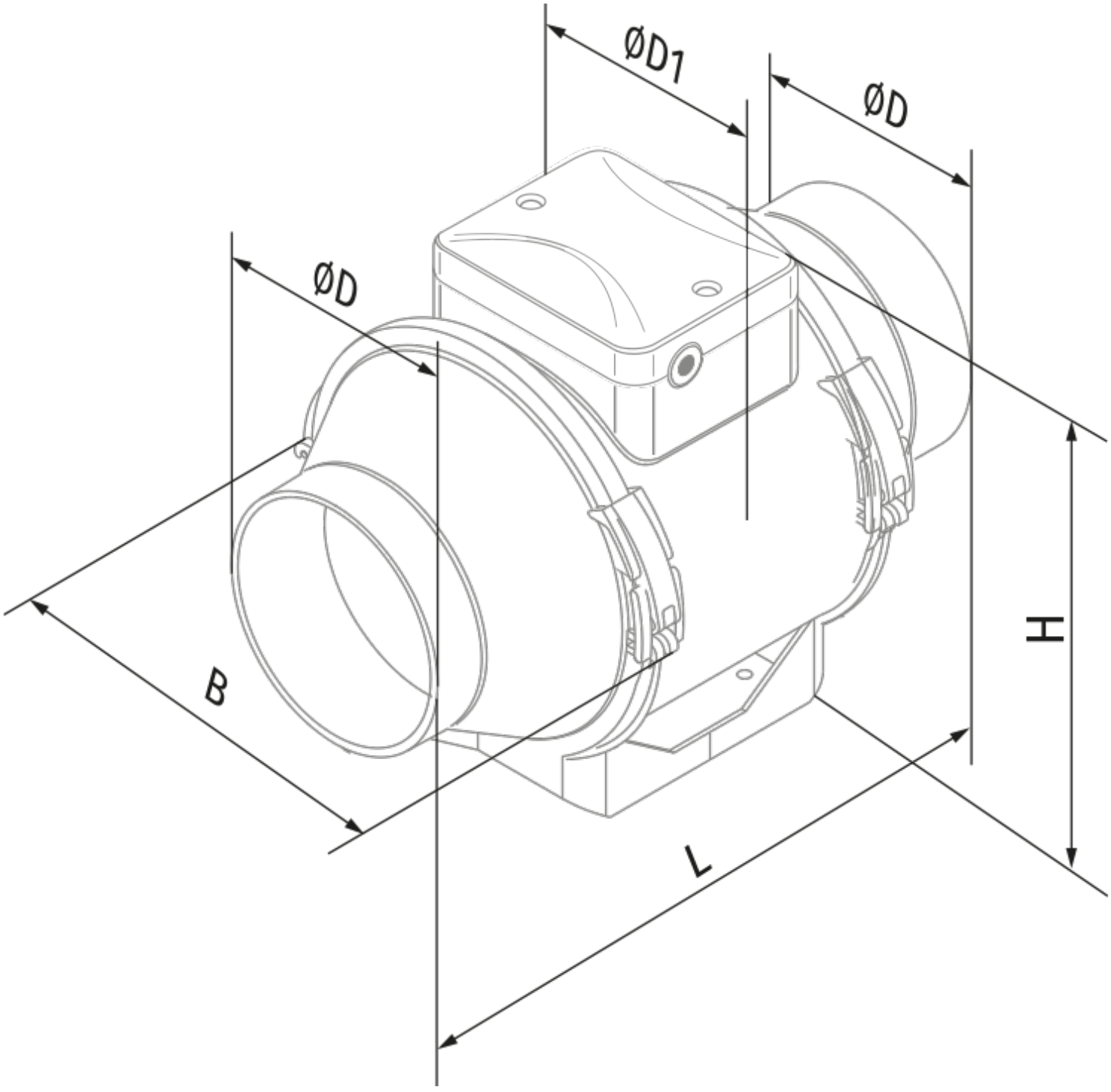
ØD1
ØD
ØD
B
H
L