

Turbo-E 125

Inline mixed-flow fans

- Impeller type: Mixed-flow
- Casing material: Polypropylene

	Unit of measurement	Turbo-E 125	
Speed	-	1	2
Connected air duct size	in	5	
Minimum supply voltage	V	120	
Maximum supply voltage	V	120	
Power supply frequency	Hz	60	
Rated power	W	24	36
Maximum unit current	A	0.3	0.46
Max Rated Airflow: CFM @ 0.2 in. w.g.	CFM	60	120
Rotation speed at 60hz	-	2191	2472
Sound level	Sones	1.4	2.5
Weight	lb	3.1	

Dimensions

Ø D	Ø D1	B	H	L
4 13/16”	5 1/2”	6 9/16”	7 1/2”	9 11/16”

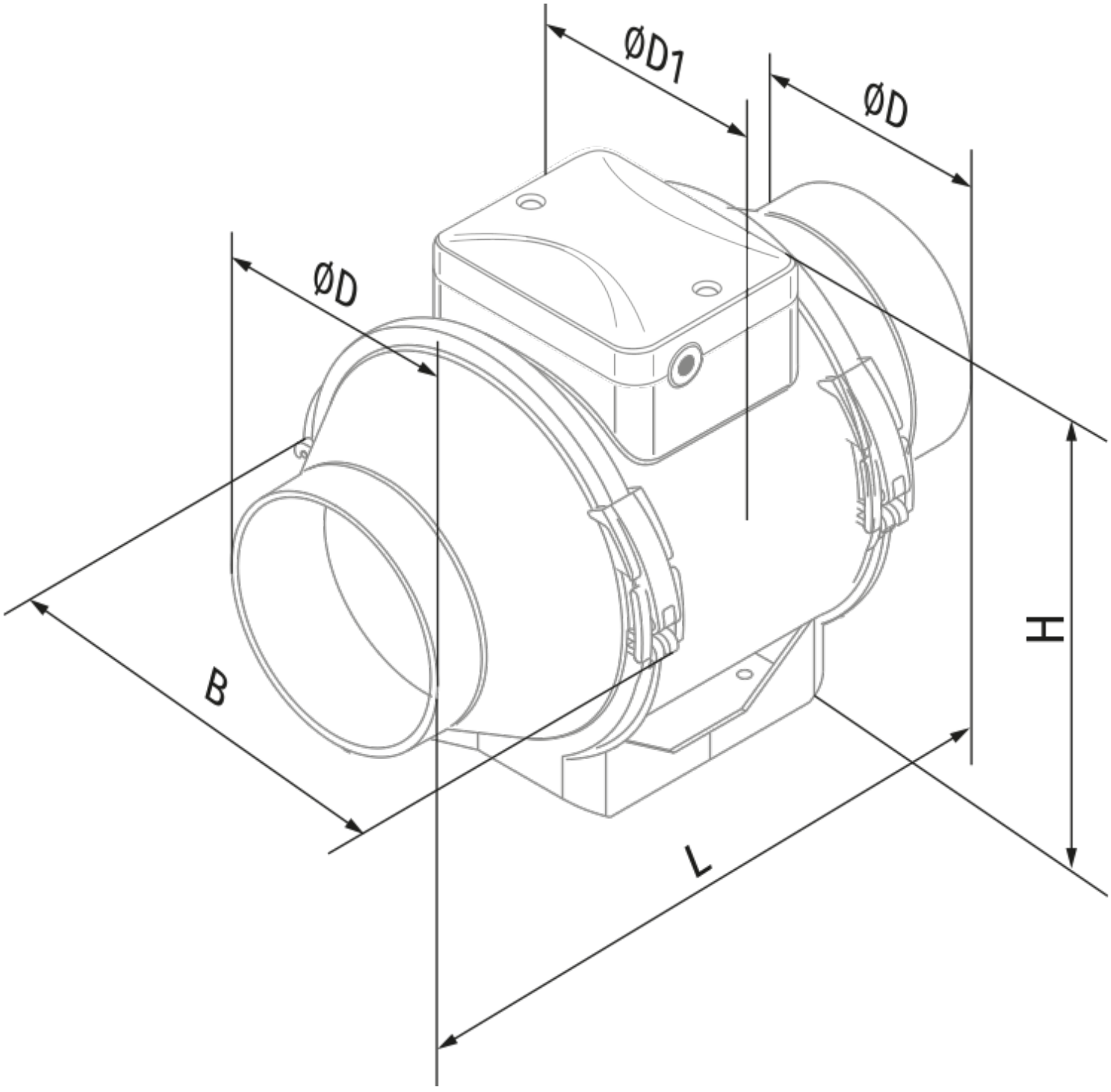
ØD1
ØD
ØD
B
H
L