

Turbo-E 150

Inline mixed-flow fans

- Impeller type: Mixed-flow
- Casing material: Polypropylene

	Unit of measurement	Turbo-E 150	
Speed	-	1	2
Connected air duct size	in	6	
Minimum supply voltage	V	120	
Maximum supply voltage	V	120	
Power supply frequency	Hz	60	
Rated power	W	28	55
Maximum unit current	A	0.23	0.46
Max Rated Airflow: CFM @ 0.2 in. w.g.	CFM	70	210
Rotation speed at 60hz	-	1896	2072
Sound level	Sones	1.5	3.5
Weight	lb	6.6	

Dimensions

Ø D	Ø D1	B	H	L
5 3/4”	7 11/16”	8 3/4”	9 13/16”	11 5/8”

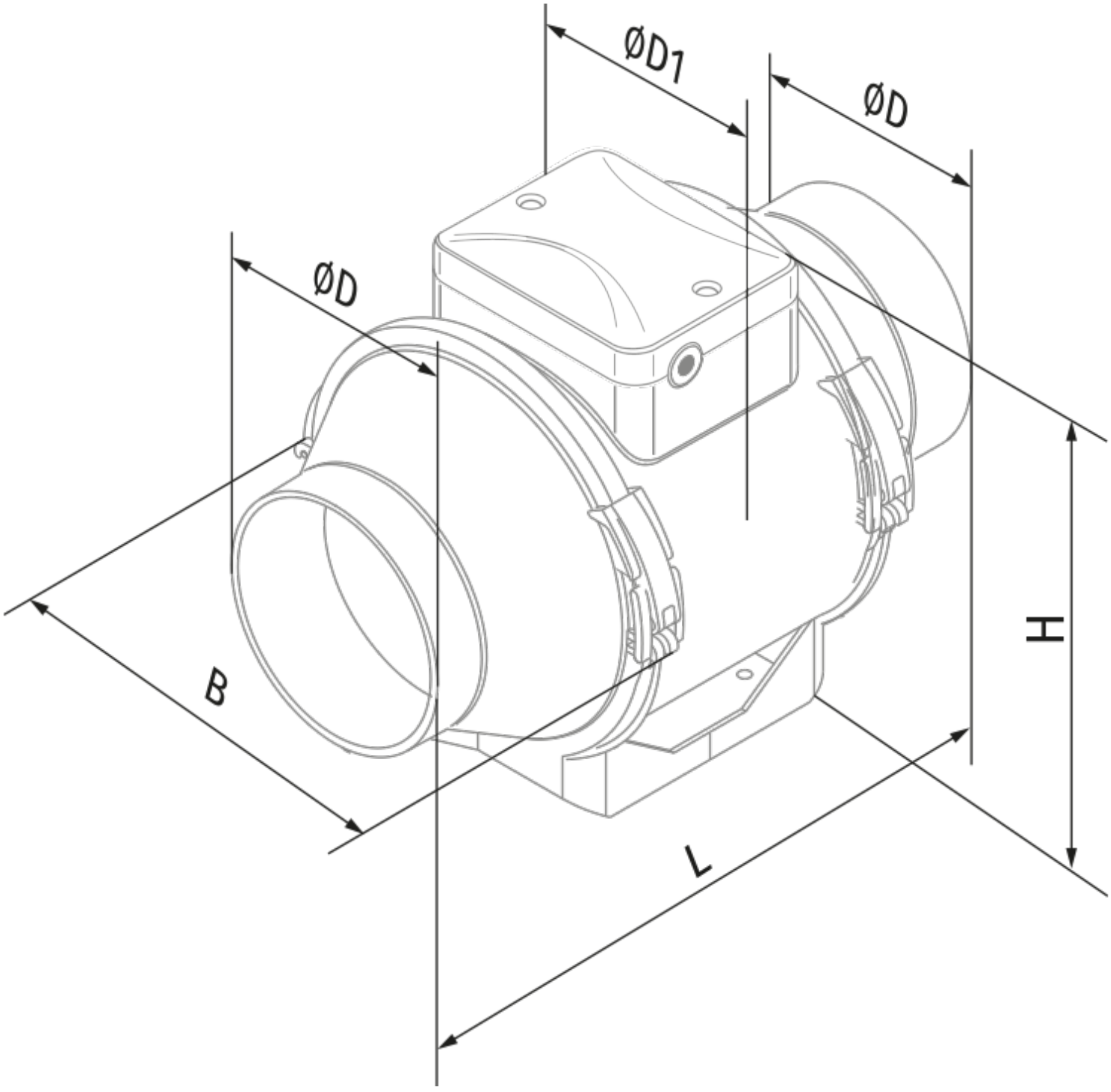
ØD1
ØD
ØD
B
H
L