

Turbo-E 200

Inline mixed-flow fans

- Impeller type: Mixed-flow
- Casing material: Polypropylene

	Unit of measurement	Turbo-E 200	
Speed	-	1	2
Connected air duct size	in	8	
Minimum supply voltage	V	120	
Maximum supply voltage	V	120	
Power supply frequency	Hz	60	
Rated power	W	65	104
Maximum unit current	A	0.54	0.87
Max Rated Airflow: CFM @ 0.2 in. w.g.	CFM	260	400
Rotation speed at 60hz	-	1552	2049
Sound level	Sones	2	4.5
Weight	lb	14.1	

Dimensions

Ø D	Ø D1	B	H	L
7 13/16”	8 1/4”	9 7/16”	10 1/4”	11 5/8”

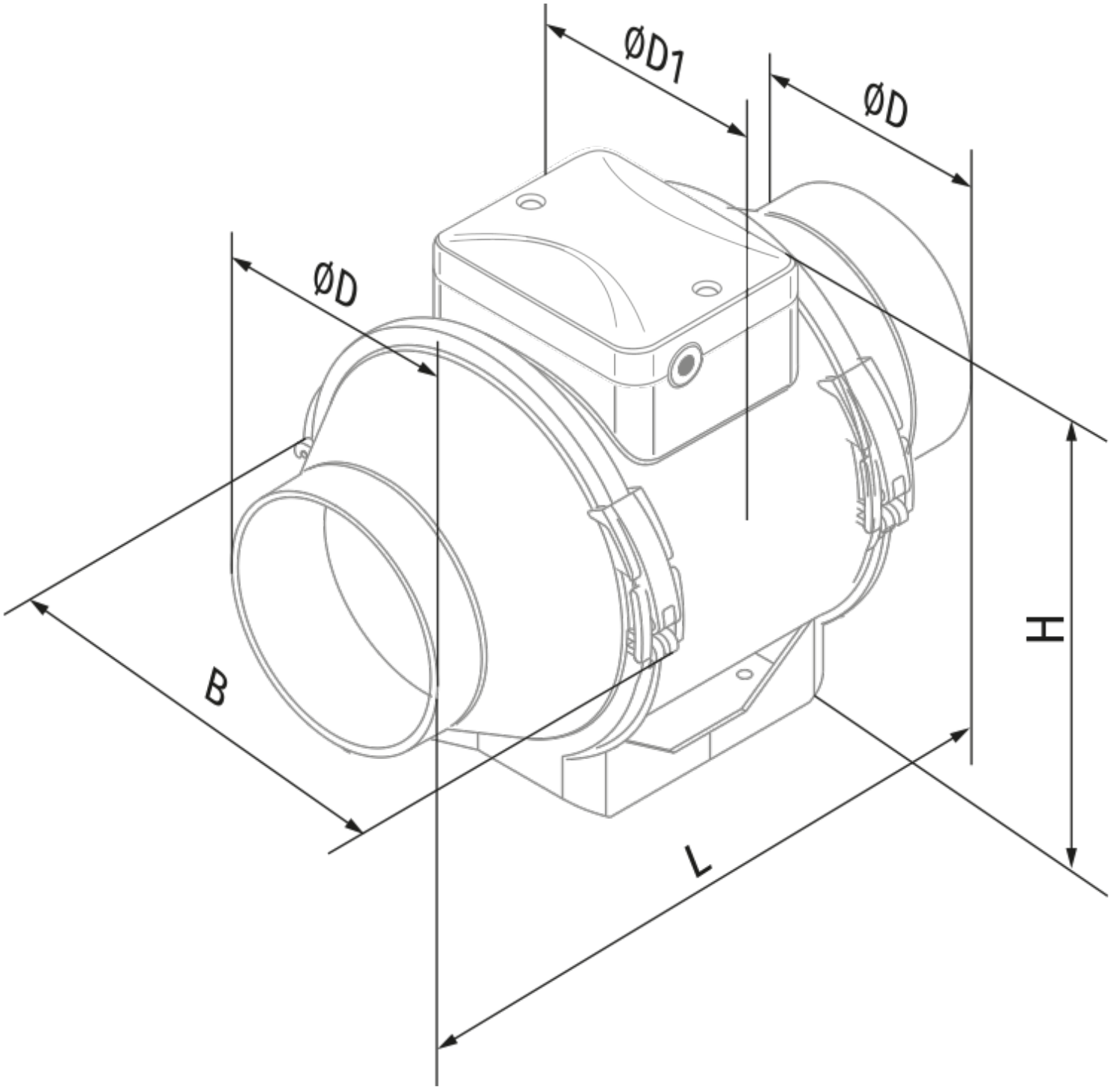
ØD1
ØD
ØD
B
H
L