

Turbo-E 250

Inline mixed-flow fans

- Impeller type: Mixed-flow
- Casing material: Polypropylene

	Unit of measurement	Turbo-E 250	
Speed	-	1	2
Connected air duct size	in	10	
Minimum supply voltage	V	120	
Maximum supply voltage	V	120	
Power supply frequency	Hz	60	
Rated power	W	130	200
Maximum unit current	A	1.11	1.68
Max Rated Airflow: CFM @ 0.2 in. w.g.	CFM	630	866
Rotation speed at 60hz	-	1925	2525
Sound level	Sones	2.5	4.5
Weight	lb	18.3	

Dimensions

Ø D	Ø D1	B	H	L
9 3/4”	10 1/8”	11 5/16”	12 11/16”	15 1/16”

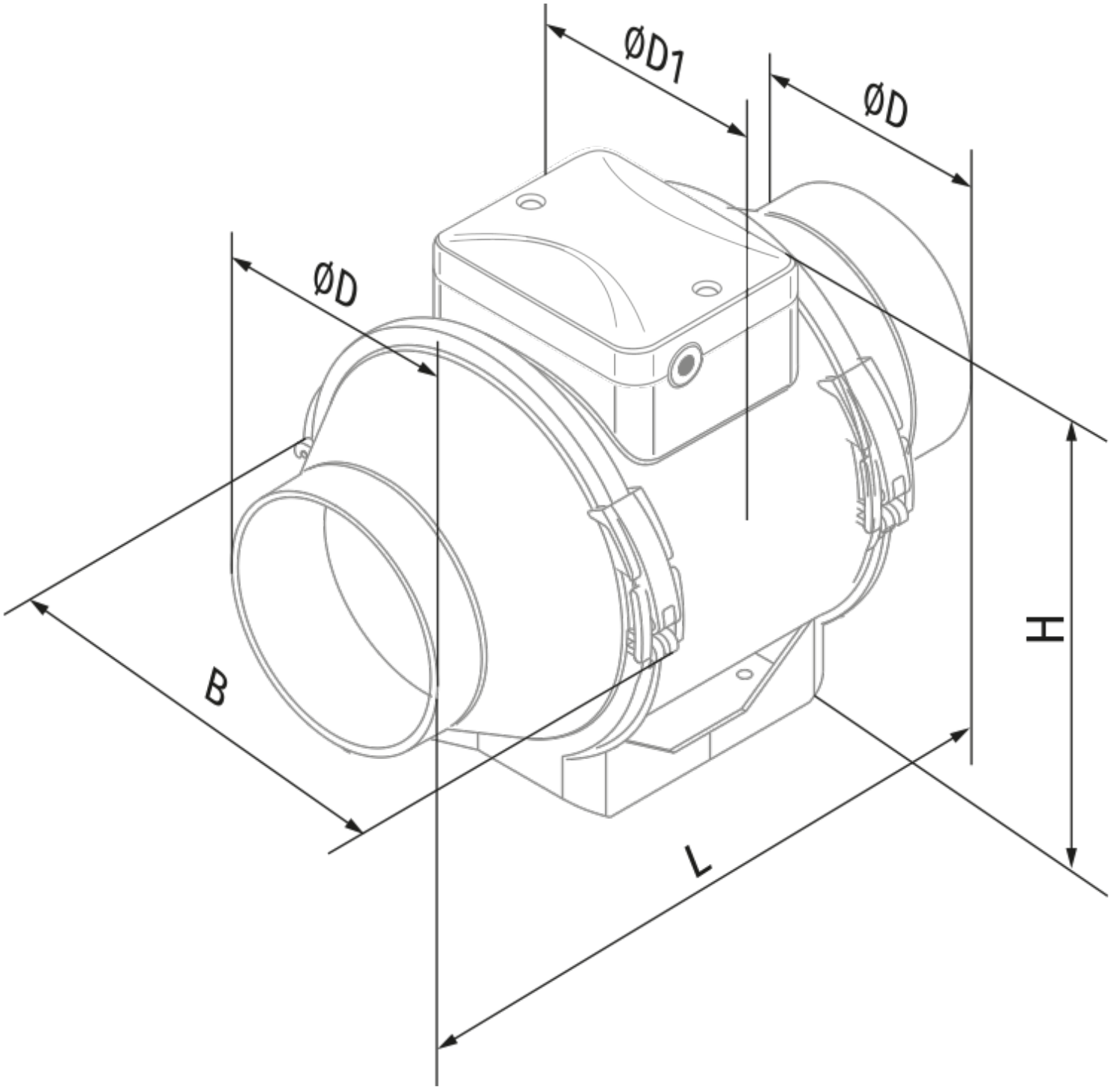
ØD1
ØD
ØD
B
H
L