

Turbo-E 315

Inline mixed-flow fans

- Impeller type: Mixed-flow
- Casing material: Polypropylene

	Unit of measurement	Turbo-E 315	
Speed	-	1	2
Connected air duct size	in	12 3/8	
Minimum supply voltage	V	120	
Maximum supply voltage	V	120	
Power supply frequency	Hz	60	
Rated power	W	224	343
Maximum unit current	A	1.89	2.95
Max Rated Airflow: CFM @ 0.2 in. w.g.	CFM	780	1020
Rotation speed at 60hz	-	1856	2375
Sound level	Sones	2.5	4.5
Weight	lb	25.1	

Dimensions

Ø D	Ø D1	B	H	L
12 3/8”	12 11/16”	14 1/4”	16 1/16”	22 15/16”

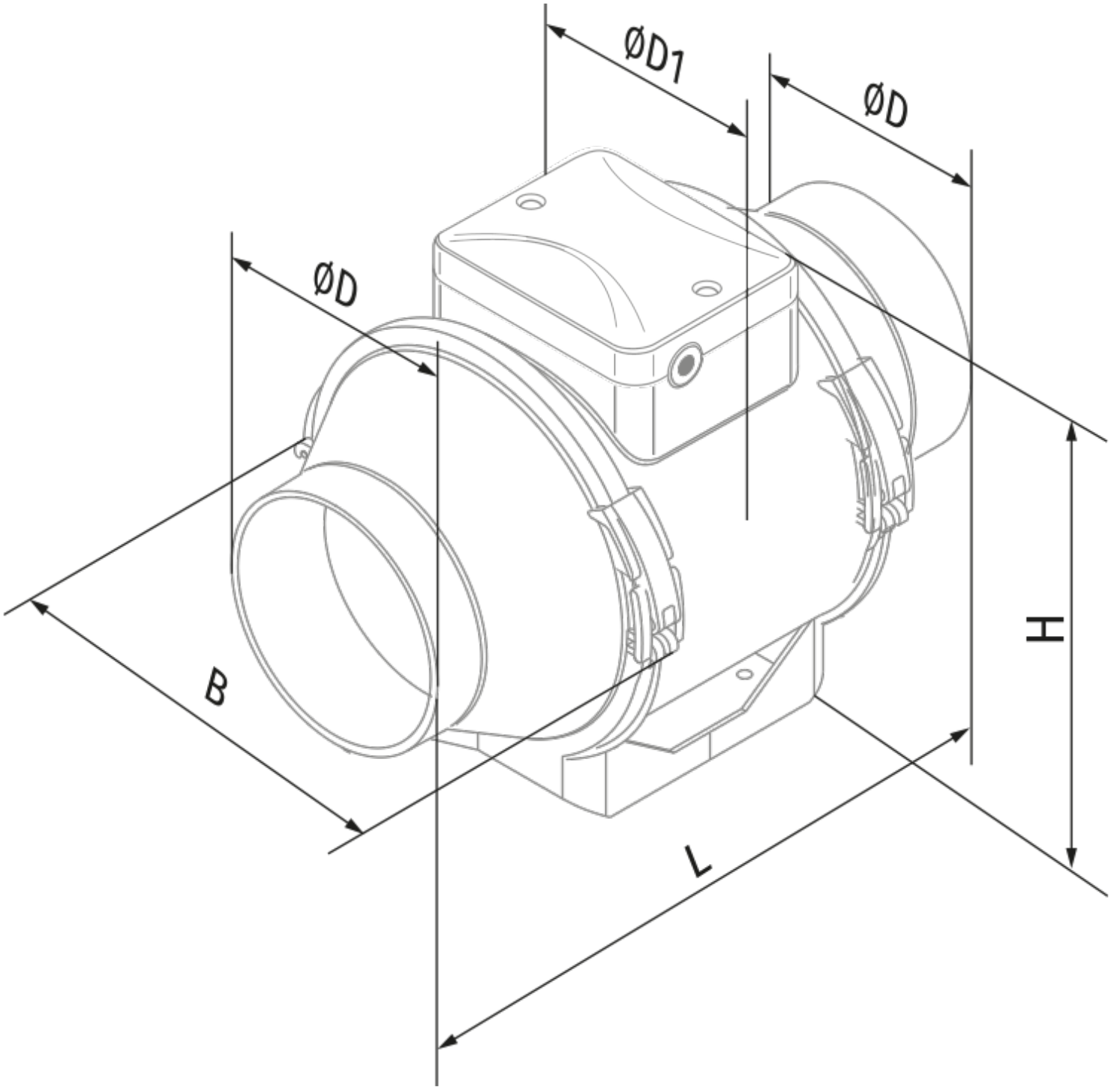
ØD1
ØD
ØD
B
H
L