

# Turbo EC 100

Inline mixed-flow fans

- Impeller type: Mixed-flow
- Casing material: ABS Plastic

| | Unit of measurement | Turbo EC 100 |
|---|---|---|
| Connected air duct size | in | 4” |
| Minimum supply voltage | V | 120 |
| Maximum supply voltage | V | 120 |
| Power supply frequency | Hz | 60 |
| Rated power | W | 25.9 |
| Maximum unit current | A | 0.42 |
| Max Rated Airflow: CFM @ 0.2 in. w.g. | CFM | 134 |
| Rotation speed at 60hz | - | 2940 |
| Sound level | Sones | 1.7 |
| Weight | lb | 3.1 |

## Dimensions

| Ø D | B | H | L |
|---|---|---|---|
| 3 3/4” | 6 9/16” | 7 1/2” | 9 11/16” |

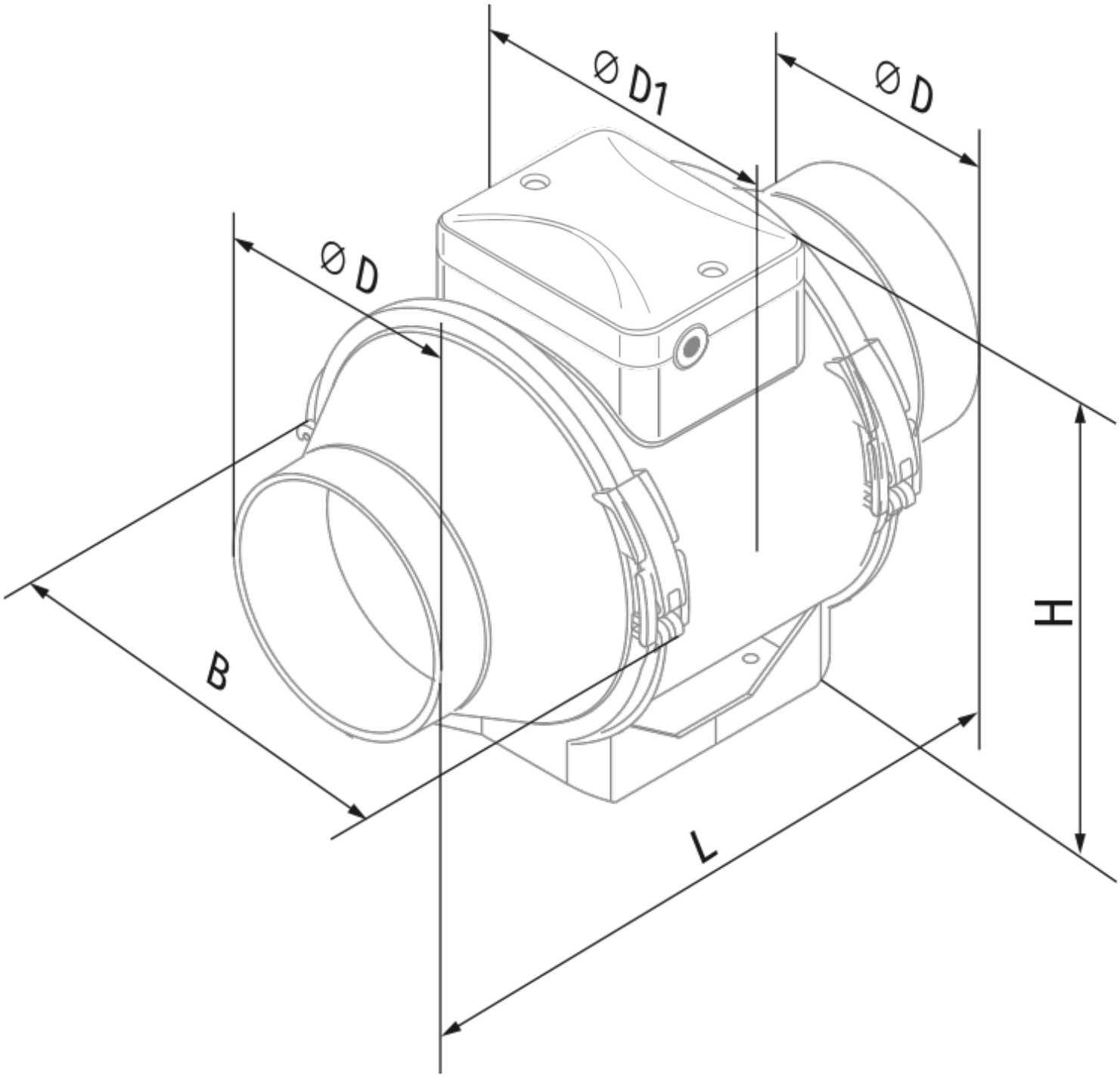
Ø D1
Ø D
Ø D
B
H
L