

Turbo EC 150

Inline mixed-flow fans

- Impeller type: Mixed-flow
- Casing material: ABS Plastic

	Unit of measurement	Turbo EC 150
Connected air duct size	in	6”
Minimum supply voltage	V	120
Maximum supply voltage	V	120
Power supply frequency	Hz	60
Rated power	W	52.4
Maximum unit current	A	0.54
Max Rated Airflow: CFM @ 0.2 in. w.g.	CFM	318
Rotation speed at 60hz	-	2800
Sound level	Sones	2.6
Weight	lb	6.6

Dimensions

Ø D	B	H	L
5 3/4”	8 3/4”	9 13/16”	11 5/8”

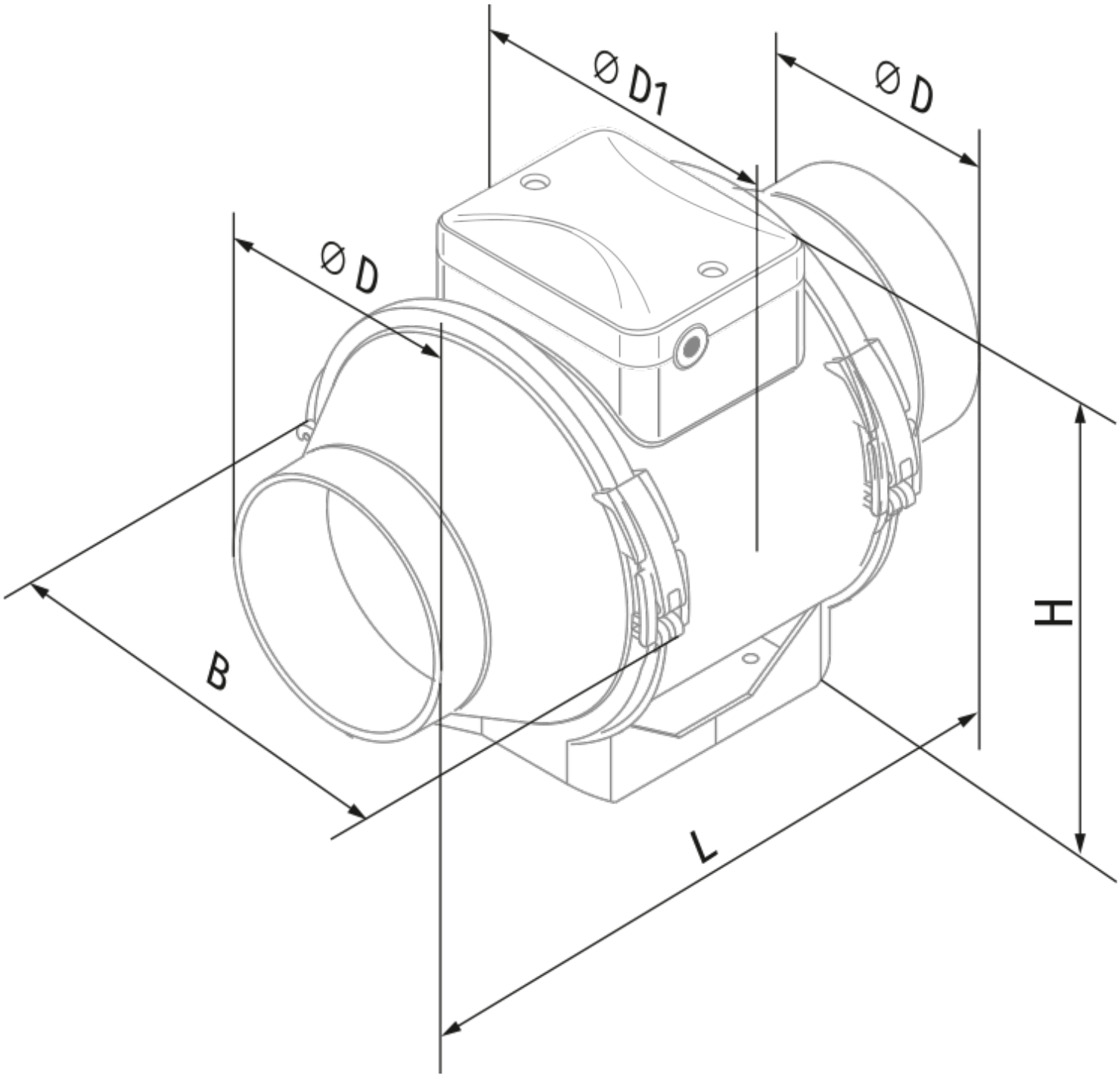
Ø D1
Ø D
Ø D
B
H
L