

Turbo EC 200

Inline mixed-flow fans

- Impeller type: Mixed-flow
- Casing material: ABS Plastic

	Unit of measurement	Turbo EC 200
Connected air duct size	in	8”
Minimum supply voltage	V	120
Maximum supply voltage	V	120
Power supply frequency	Hz	60
Rated power	W	121.3
Maximum unit current	A	1.76
Max Rated Airflow: CFM @ 0.2 in. w.g.	CFM	560
Rotation speed at 60hz	-	2750
Sound level	Sones	3.2
Weight	lb	14.1

Dimensions

Ø D	B	H	L
7 13/16”	9 7/16”	10 1/4”	11 5/8”

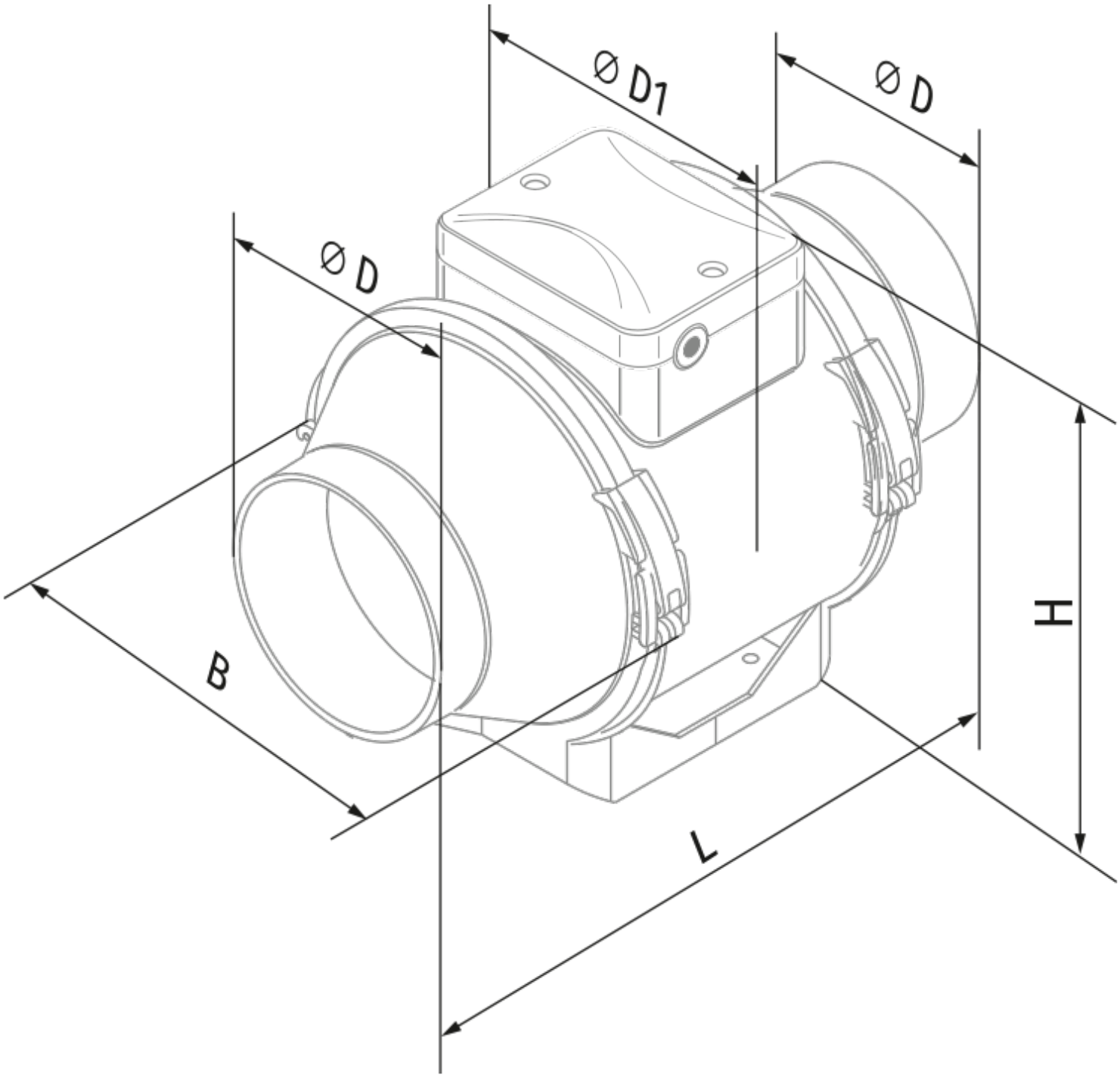
Ø D1
Ø D
Ø D
B
H
L