

Turbo EC 250

Inline mixed-flow fans

- Impeller type: Mixed-flow
- Casing material: ABS Plastic

	Unit of measurement	Turbo EC 250
Connected air duct size	in	10”
Minimum supply voltage	V	120
Maximum supply voltage	V	120
Power supply frequency	Hz	60
Rated power	W	170.6
Maximum unit current	A	2.26
Max Rated Airflow: CFM @ 0.2 in. w.g.	CFM	680
Rotation speed at 60hz	-	2568
Sound level	Sones	3.2
Weight	lb	18.3

Dimensions

Ø D	B	H	L
9 3/4”	11 5/16”	12 11/16”	15 1/16”

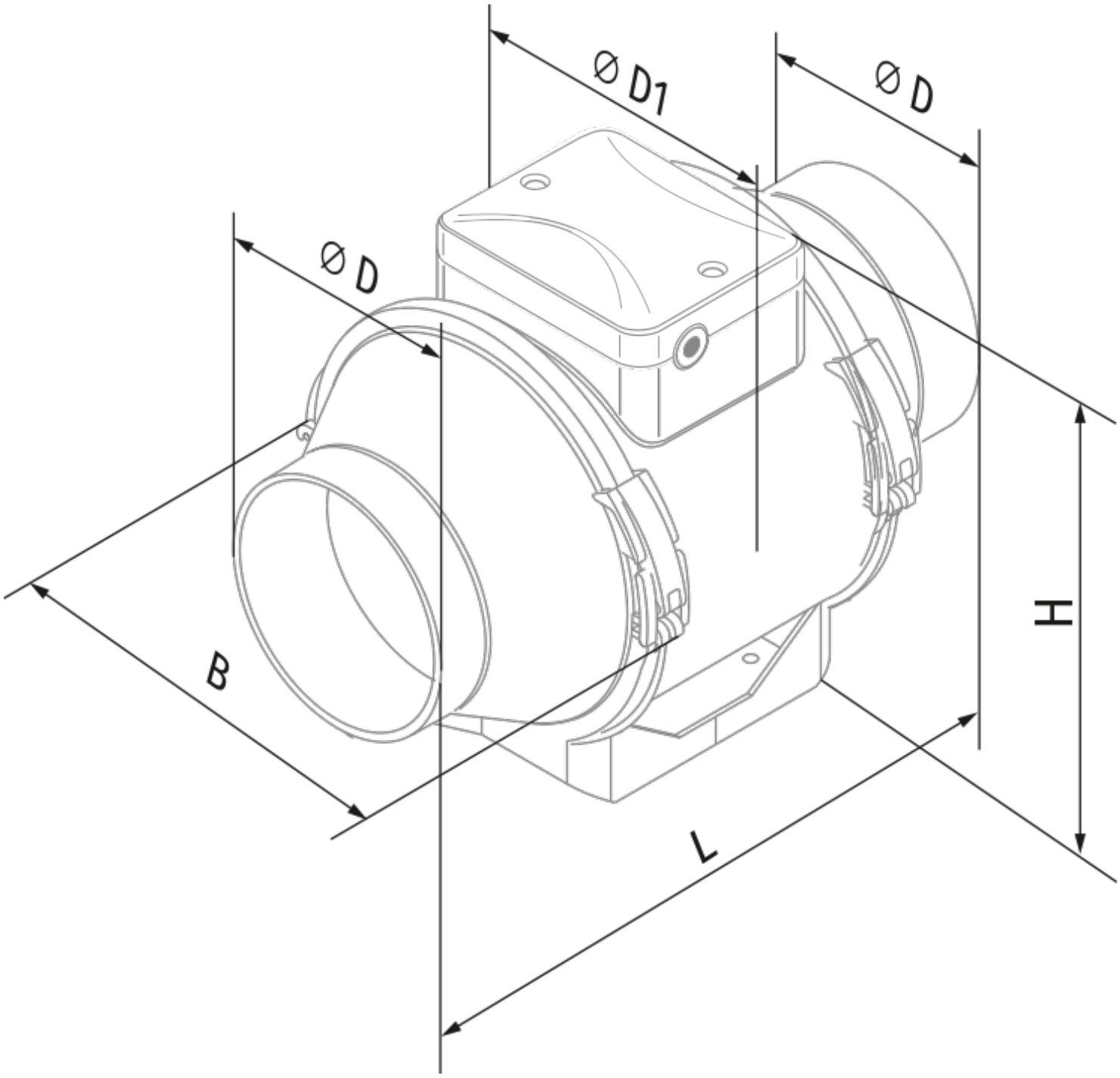
Ø D1
Ø D
Ø D
B
H
L