

# Turbo Max 100

Inline mixed-flow fans provide ultra quiet operation and excellent airflow even in high pressure systems

- Impeller type: Mixed-flow
- Casing material: Plastic

| | Unit of measurement | Turbo Max 100 | |
|---|---|---|---|
| Speed | - | 1 | 2 |
| Connected air duct size | in | 4 | |
| Minimum supply voltage | V | 120 | |
| Maximum supply voltage | V | 120 | |
| Power supply frequency | Hz | 60 | |
| Rated power | W | 39 | 48 |
| Maximum unit current | A | 0.32 | 0.4 |
| Max Rated Airflow: CFM @ 0.2 in. w.g. | CFM | 120 | 180 |
| Rotation speed at 60hz | - | 2414 | 2927 |
| Weight | lb | 4 | |

## Dimensions

| Ø D | B | H | L |
|---|---|---|---|
| 3 7/8” | 7 5/8” | 8 7/8” | 12” |

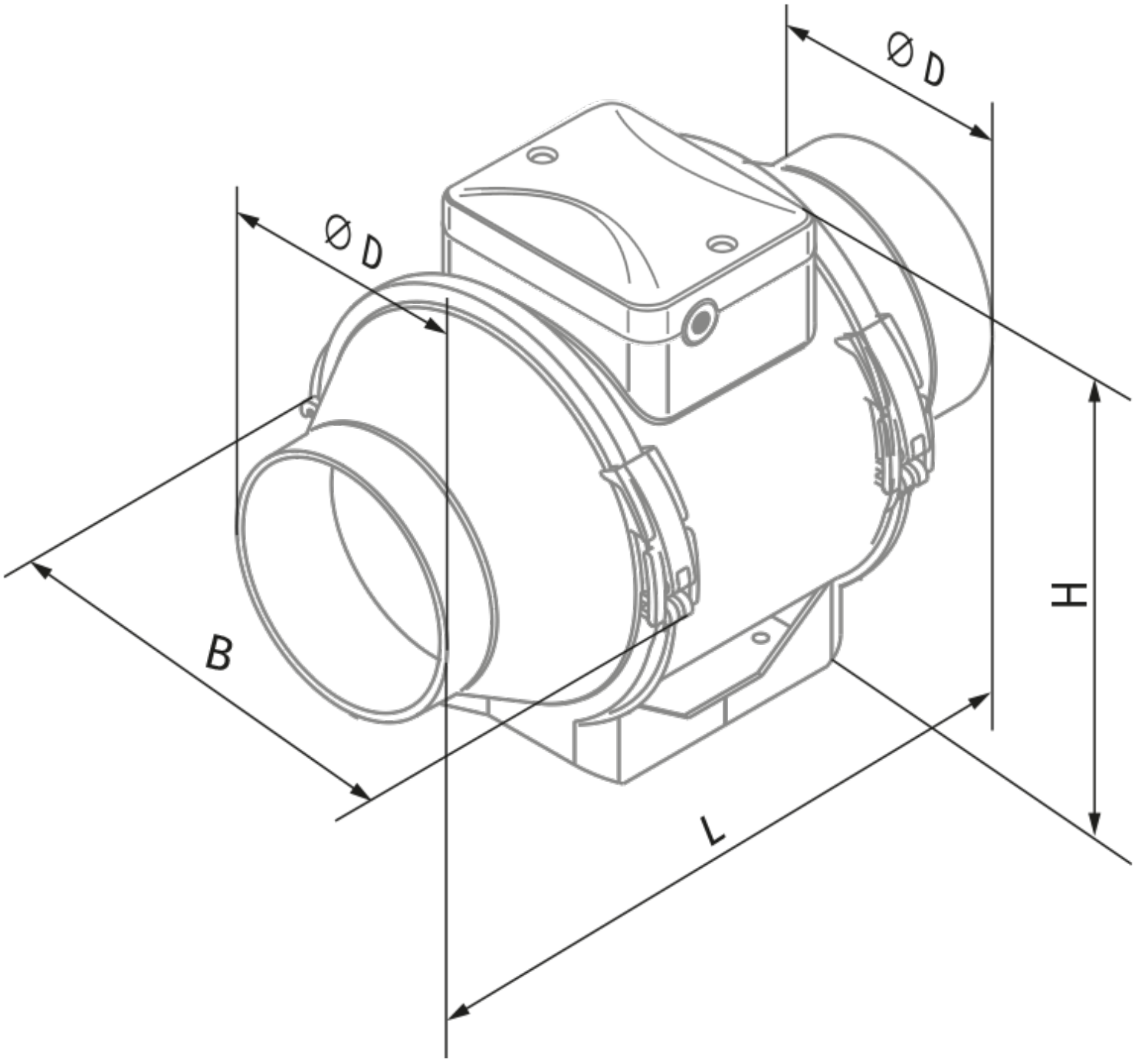
Ø D
Ø D
B
H
L