

Turbo Max 125

Inline mixed-flow fans provide ultra quiet operation and excellent airflow even in high pressure systems

- Impeller type: Mixed-flow
- Casing material: Plastic

	Unit of measurement	Turbo Max 125	
Speed	-	1	2
Connected air duct size	in	5	
Minimum supply voltage	V	120	
Maximum supply voltage	V	120	
Power supply frequency	Hz	60	
Rated power	W	48	62
Maximum unit current	A	0.42	0.53
Max Rated Airflow: CFM @ 0.2 in. w.g.	CFM	190	250
Rotation speed at 60hz	-	2570	3003
Weight	lb	4	

Dimensions

Ø D	B	H	L
4 7/8”	7 1/2”	8 7/8”	10 1/8”

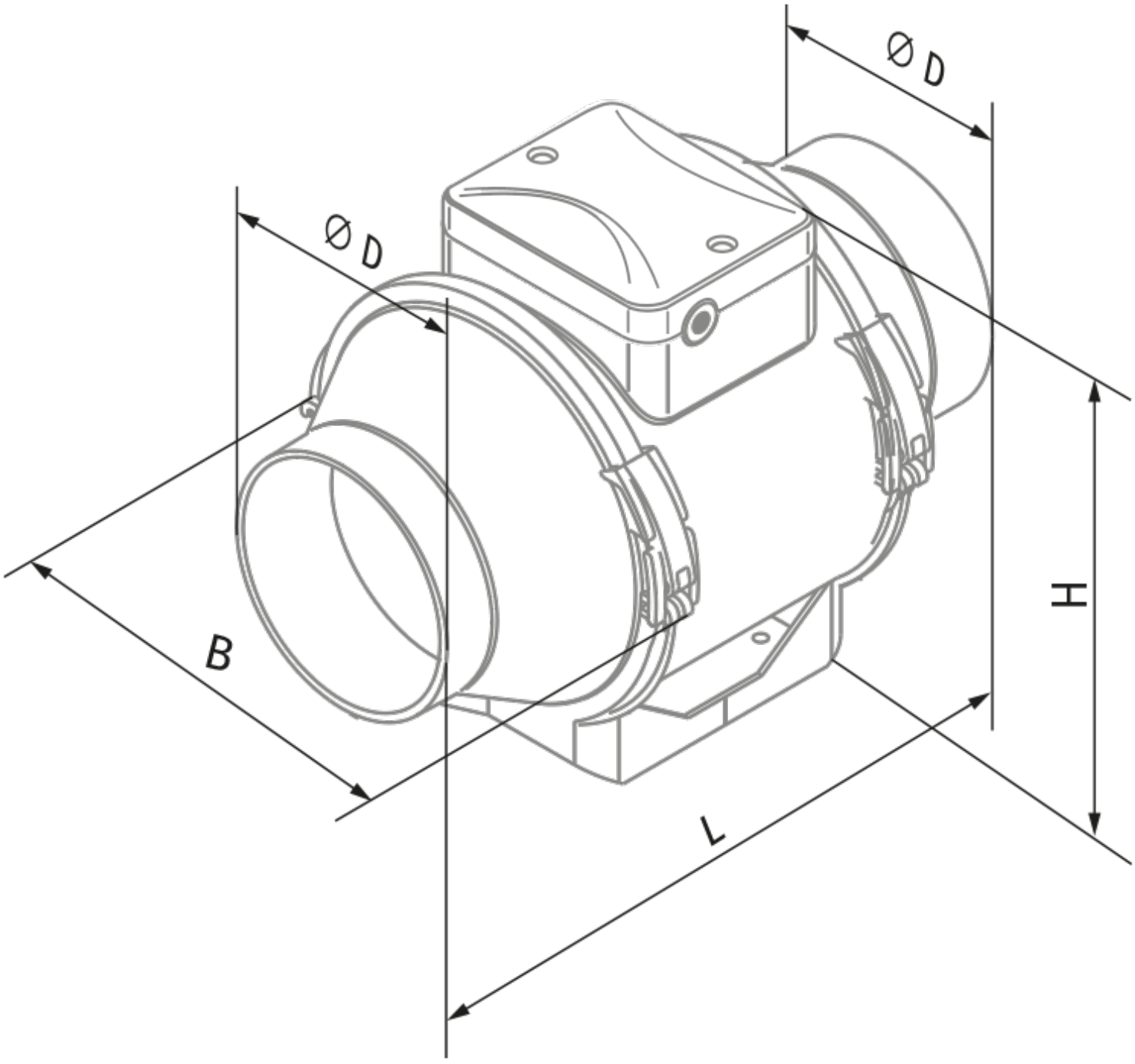
Ø D
Ø D
B
H
L