

# Turbo Max 150

Inline mixed-flow fans provide ultra quiet operation and excellent airflow even in high pressure systems

- Impeller type: Mixed-flow
- Casing material: Plastic

| | Unit of measurement | Turbo Max 150 | |
|---|---|---|---|
| Speed | - | 1 | 2 |
| Connected air duct size | in | 6 | |
| Minimum supply voltage | V | 120 | |
| Maximum supply voltage | V | 120 | |
| Power supply frequency | Hz | 60 | |
| Rated power | W | 76 | 81 |
| Maximum unit current | A | 0.64 | 0.69 |
| Max Rated Airflow: CFM @ 0.2 in. w.g. | CFM | 270 | 350 |
| Rotation speed at 60hz | - | 2432 | 2981 |
| Weight | lb | 6 | |

## Dimensions

| Ø D | B | H | L |
|---|---|---|---|
| 5 7/8” | 8 1/2” | 9 7/8” | 11 3/8” |

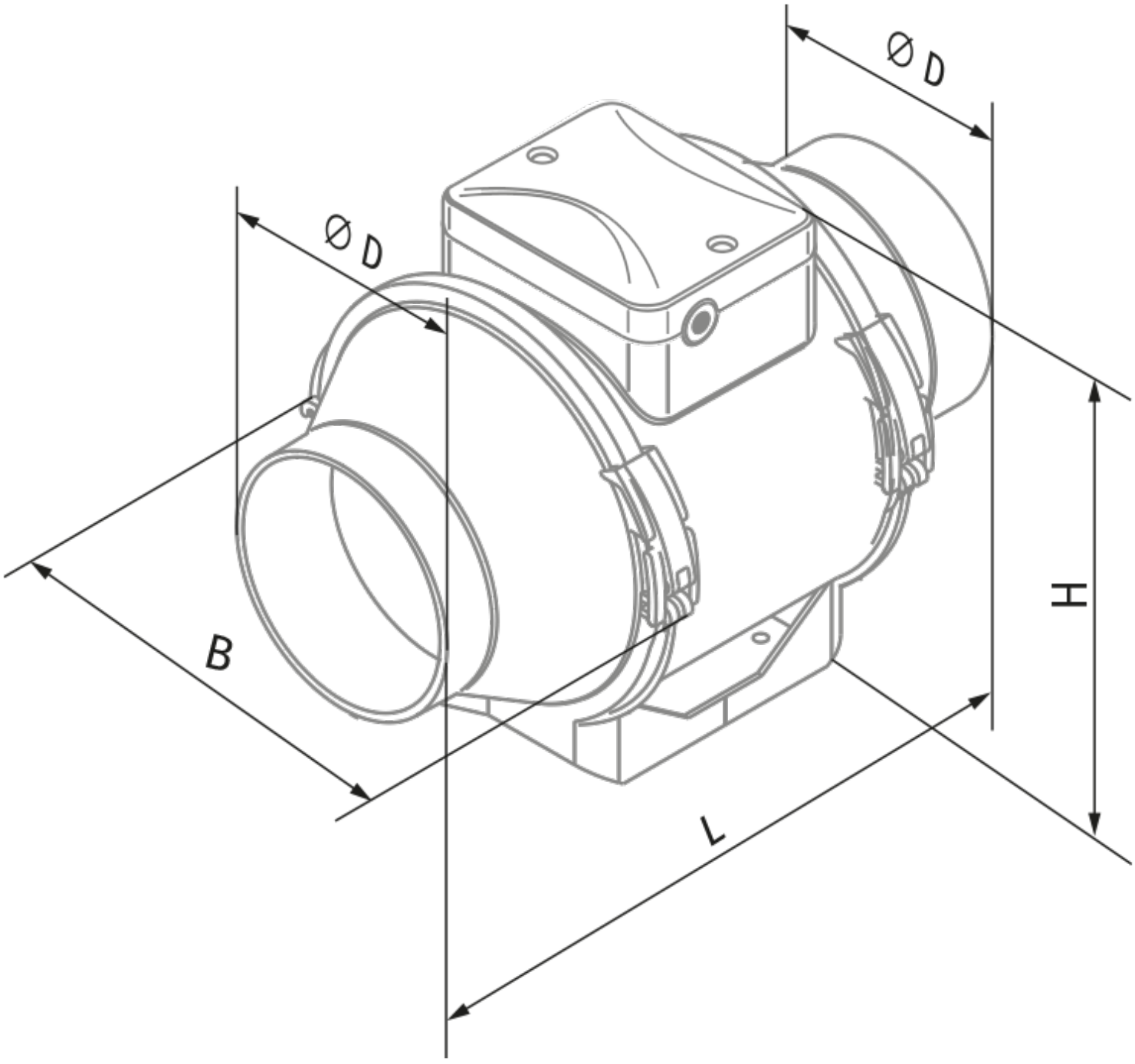
Ø D
Ø D
B
H
L